UMT 78917

15.13.3.2

UMTRA-DOE/AL-350215.0000

FINAL
LONG-TERM SURVEILLANCE PLAN
FOR THE
SPOOK, WYOMING, DISPOSAL SITE

JANUARY 1993

RECEIVED
JUN 05 1997
OSTI

DISTRIBUTION OF THIS DOCUMENT IS UNLIMITED

MASTER

DISCLAIMER

Portions of this document may be illegible in electronic image products. Images are produced from the best available original document.

UMTRA-DOE/AL-350215.0000

FINAL
LONG-TERM SURVEILLANCE PLAN
FOR THE
SPOOK, WYOMING, DISPOSAL SITE

JANUARY 1993

This is a controlled document. The holder of the document will be notified of page/content changes, and will be responsible for inserting all changes to keep the document current.

TABLE OF CONTENTS

Section			Page
1.0	INTRODUCTION		1
	1.1	Background	1
	1.2	Licensing process	1
		1.2.1 Acquisition	3
	1.3	Long-term surveillance plan	3
2.0	FINAL SITE CONDITIONS		5
	2.1	Background information	5
	2.2	Final site conditions	5
		2.2.1 Description and location of disposal site area	5
		2.2.2 Disposal cell design	7
3.0	SITE DRAWINGS AND PHOTOGRAPHS		11
	3.1	Disposal site maps and drawings	11
		3.1.1 Disposal site vicinity map	11
		3.1.2 Disposal site topographic map	11
		3.1.3 Disposal site map	12
		3.1.4 Disposal site as-built drawings	12
	3.2	Site baseline photographs	12
	3.3	Site aerial photographs	13
	3.4	Site inspection photographs	13
4.0	PERMANENT SITE SURVEILLANCE FEATURES		15
	4.1	Survey monuments	15
	4.2	Boundary monuments	15
	4.3	Site markers	15
	4.4	Entrance and perimeter signs	21
	4.5	Settlement plates	21
	4.6	Additional site surveillance requirements	21
5.0	GROUNDWATER MONITORING		23
	5.1	Groundwater characterization	23
	5.2	Groundwater monitoring program	24
6.0	SITE INSPECTIONS		27
	6.1	Inspection frequency	27
	6.2	Inspection team	27
	6.3	Preparation for inspection	28
	6.4	Site inspection and inspection checklist	28
	6.5	Site inspection map	29
	6.6	Reporting requirements	29
7.0	FOLLOW-UP INSPECTIONS/CONTINGENCY INSPECTIONS		31
	7.1	Follow-up inspections	31
		7.1.1 Need for inspection	31
		7.1.2 Field procedures	31

TABLE OF CONTENTS (Continued)

Section		Page
	7.1.3 Reporting requirements	31
7.2	Contingency inspections	32
	7.2.1 Need for inspection	32
	7.2.2 Notification procedures	32
	7.2.3 Field procedures	32
	7.2.4 Reporting requirements	33
8.0	CUSTODIAL MAINTENANCE	35
8.1	Planned maintenance	35
8.2	Unscheduled maintenance or repair	35
8.3	Certification and reporting requirements for unscheduled maintenance or repair	35
9.0	CORRECTIVE ACTION	37
9.1	Problem identification	37
9.2	Implementation of corrective action	37
9.3	Reporting procedures	40
10.0	RECORD KEEPING AND REPORTING REQUIREMENTS	41
10.1	Records	41
10.2	Reports	42
11.0	EMERGENCY NOTIFICATION AND REPORTING	45
11.1	Agency agreements	45
11.2	Earthquakes	45
11.3	Meteorological events	46
12.0	QUALITY ASSURANCE	47
13.0	PERSONNEL HEALTH AND SAFETY	49
13.1	Health and safety	49
	13.1.1 Emergency medical and law enforcement	49
13.2	Reportable incidents	50
14.0	REFERENCES	51

ATTACHMENT 1 NRC CONCURRENCE LETTER
ATTACHMENT 2 LAND OWNERSHIP DOCUMENTATION
ATTACHMENT 3 SITE INSPECTION PHOTO LOG
ATTACHMENT 4 SITE INSPECTION CHECKLIST
ATTACHMENT 5 AGENCY NOTIFICATION AGREEMENTS
ATTACHMENT 6 ACRONYMS

PLATE 1 SPOOK SITE PLAN
PLATE 2 SPOOK SITE AS-BUILT TOPOGRAPHIC MAP

LIST OF FIGURES

Figure		Page
1.1	Location of the Spook disposal site in Converse County, Wyoming	2
2.1	Directions to the Spook disposal site in Converse County, Wyoming	6
2.2	Plan view of the Spook disposal cell in Converse County, Wyoming	8
2.3	Cross-sectional views of the Spook disposal cell in Converse County, Wyoming	9
4.1	Locations of permanent surveillance features at the Spook site in Converse County, Wyoming	16
4.2	Survey monument at the Spook disposal site in Converse County, Wyoming	18
4.3	Boundary monument at the Spook disposal site in Converse County, Wyoming	19
4.4	Site marker message at the Spook disposal site in Converse County, Wyoming	20
4.5	Entrance and perimeter signs at the Spook disposal site in Converse County, Wyoming	22
9.1	Corrective action UMTRA Project long-term surveillance program	38
9.2	Key elements in the corrective action process	39

LIST OF TABLES

Table		Page
3.1	Aerial photography specifications for the Spook disposal site	14
4.1	Locations of monuments and markers	17

1.0 INTRODUCTION

In Title I of the Uranium Mill Tailings Radiation Control Act (UMTRCA) of 1978 (Public Law 95-604) and subsequent amendments, the U.S. Department of Energy (DOE) was authorized to perform remedial actions at 24 inactive uranium mill tailings sites to reduce the future potential for health effects associated with the presence of unstabilized, radioactive materials. A general license for the custody and long-term care of DOE Uranium Mill Tailings Remedial Action (UMTRA) Project permanent disposal sites was issued by the U.S. Nuclear Regulatory Commission (NRC), and became effective on November 29, 1990 (55 FR 45591). The general license will be in effect for a specific disposal site when the NRC accepts the disposal site's long-term surveillance plan (LTSP) and concurs that remedial action is complete at that site. This document describes in detail the long-term surveillance activities for the Spook, Wyoming, disposal site, including monitoring, maintenance, and emergency measures necessary to fulfill the conditions of the general license, and to ensure that the disposal cell continues to comply with the UMTRA design standards. This plan is based on DOE's draft document, Guidance for Implementing the UMTRA Project Long-term Surveillance Program (DOE, 1992).

1.1 BACKGROUND

The Spook, Wyoming, uranium mill tailings site in Converse County, Wyoming was one of the 24 sites identified in the UMTRCA. The Spook site is 48 miles (mi) [77 kilometers (km)] northeast of Casper, Wyoming, in portions of Sections 27 and 28, Township 38 North, Range 73 West (T38N, R73W), 6th Principal Meridian. Figure 1.1 shows the general location of the site. The Spook site was also identified by the state of Wyoming as qualifying for reclamation under the Surface Mining Control and Reclamation Act (SMCRA) of 1977 (Public Law 95-87). The SMCRA authorized the U.S. Department of the Interior to reclaim abandoned mine lands (AML) based on a state selection program called the Abandoned Mine Lands Program.

1.2 LICENSING PROCESS

One of the measures enacted by Congress to ensure continued public safety after completion of the UMTRCA remedial actions was to place the long-term care of tailings disposal sites in the hands of the Federal Government. Title I of the UMTRCA allows the NRC to issue a general license for the long-term care of a disposal site once it has accepted a final LTSP for the site. This LTSP identifies the monitoring, maintenance, and emergency measures necessary to protect public health and safety and any other actions necessary to comply with 10 CFR 40.

The NRC has developed regulations (10 CFR 40.27) for issuing a general license for the long-term care of Title I disposal sites, such as the Spook disposal site. Under these regulations, the general license becomes effective when the NRC concurs in the DOE's certification that the remedial action at the site is complete and accepts a site's LTSP.

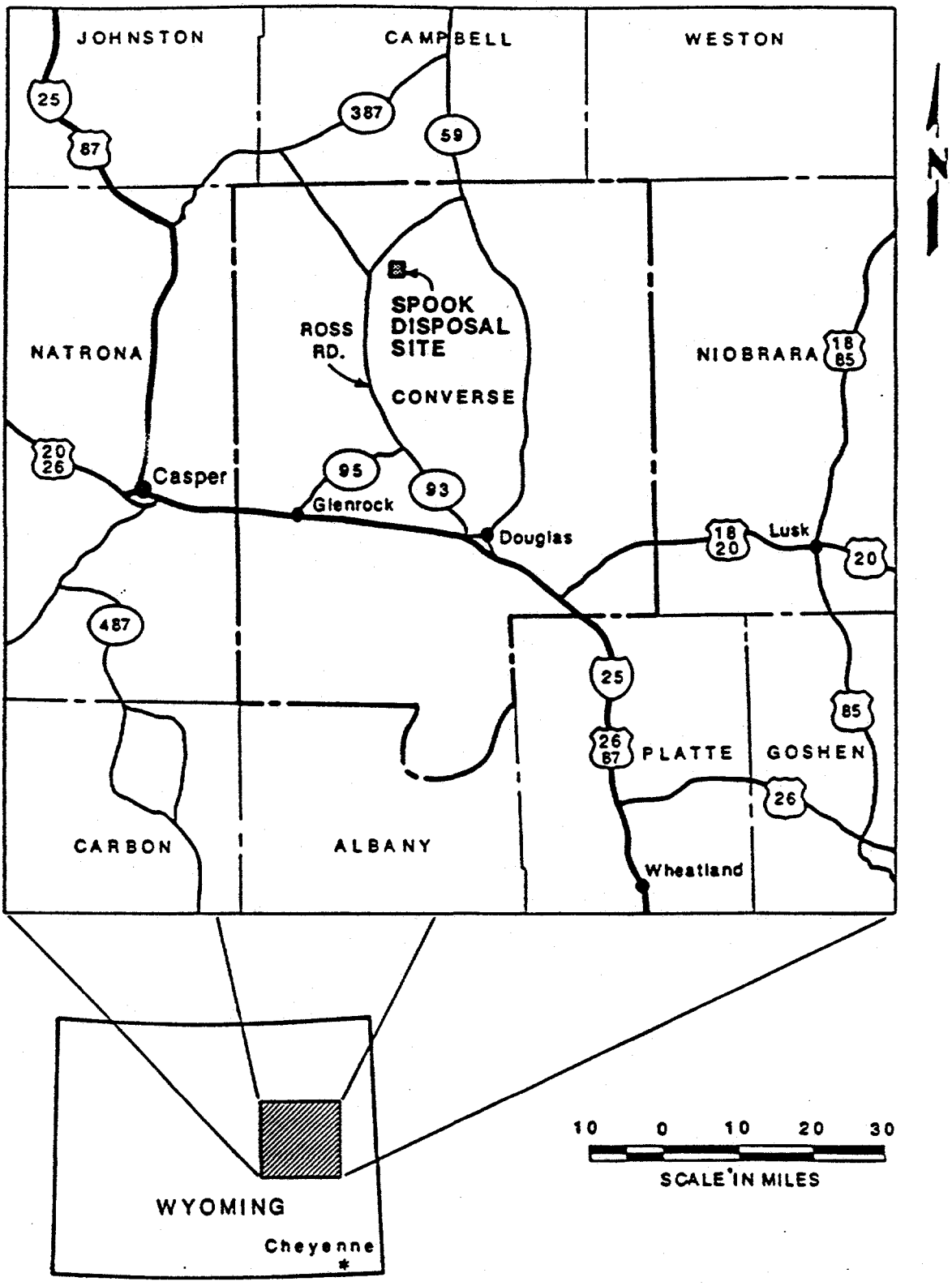

FIGURE 1.1
LOCATION OF THE SPOOK DISPOSAL SITE IN
CONVERSE COUNTY, WYOMING

Groundwater monitoring is not required at the Spook site because groundwater in the uppermost aquifer is of limited use (Class III), and a narrative supplemental standard has been applied to the site that does not include numerical concentration limits or a point of compliance. Groundwater is of limited use because of widespread ambient contamination resulting from naturally occurring uranium mineralization and human activities related to uranium exploration and mining.

Groundwater restoration at the Spook disposal site has been deferred to a later project phase and will be evaluated during the programmatic environmental impact statement (PEIS). The LTSP may be modified at a later time if groundwater restoration is required as a result of the PEIS process.

The DOE has prepared this LTSP for NRC approval to satisfy the requirements for licensing of the Spook disposal site and to provide guidance for future surveillance and care activities. Since the NRC has concurred that the remedial action is complete according to the approved remedial action plan (RAP), the general license for the Spook site will become effective when the final LTSP is accepted by the NRC.

When the license is in effect for the Spook disposal site, all programmatic responsibilities for carrying out surveillance and monitoring under the UMTRA Project's Long-term Surveillance Program will be transferred to the DOE Grand Junction Projects Office (GJPO). The programmatic transfer will occur within 30 days of notification by the NRC that the license is in effect.

1.2.1 Acquisition

The state of Wyoming, as agent for the United States of America, acquired title to a 13.5-acre [5.5-hectare (ha)] surface area over the disposal cell. The Bureau of Land Management has permanently transferred the jurisdiction of 80 acres (32 ha) of subsurface rights, subject to existing claims, to the DOE, thus providing an adequate buffer area to prevent potential mineral claims from encroaching on the permanent disposal area. The U.S. Army Corps of Engineers has acquired the one existing claim in the eastern portion of the subsurface area consisting of approximately 9 acres (4 ha). This acquisition extinguishes all existing claims that are within 200 feet (ft) [61 meters (m)] of the disposal cell. Attachment 2 provides documentation related to land ownership.

1.3 LONG-TERM SURVEILLANCE PLAN

This document describes the long-term surveillance activities that will be carried out at the Spook site to ensure that the disposal cell continues to perform as designed. This plan is based on DOE's draft document, "Guidance for Implementing the UMTRA Project Long-term Surveillance Program" (DOE, 1992).

As required under 10 CFR 40.27, this LTSP addresses the following:

- Site description and ownership.
- Description of final site conditions.
- Site inspection procedures and personnel.
- Maintenance and corrective actions programs.
- Record keeping and reporting.
- Quality assurance (QA).
- Emergency response.

2.0 FINAL SITE CONDITIONS

2.1 BACKGROUND INFORMATION

The Spook site consisted of an abandoned, open pit uranium mine containing a small amount of uranium mill tailings. Overburden materials had been left in piles around the perimeter of the pit. Several small ore piles, an acid pond, several mine adits, and miscellaneous debris related to the mining operations were also present. A cooperative agreement between the DOE and the state of Wyoming for the remedial activities at the site was signed on January 30, 1984 (DOE, 1989). A joint remedial action that satisfied both the UMTRCA and AML program requirements was proposed for the Spook site. Surface remedial actions began in the Spring of 1989, and were completed in the Fall of 1989. This joint remedial action consisted of the DOE stabilizing all radioactively contaminated materials in the bottom of the open pit and the AML Program backfilling the pit with the overburden materials, contouring the surface to establish positive drainage, and seeding all disturbed areas with endemic plant species. Plates 1 and 2 show detailed site conditions before and after the remedial action. There were 269,618 cubic yards (206,150 cubic meters) of contaminated materials placed in the pit. Prior to remedial action, off-pile radon (Rn-222) measurements ranged from to 0.5 to 2.8 picocuries per Liter (13.5 to 75.7 becquerels/Liter). The joint remedial action to stabilize the tailings and reclaim the site was described and evaluated in an environmental assessment (EA) (DOE, 1989) and a RAP (DOE, 1990). The DOE obtained the concurrence of the NRC and the state of Wyoming on its plan for remedial action on March 15, 1990. The DOE portion of the remedial action was performed to meet the U.S. Environmental Protection Agency's (EPA) cleanup standards for inactive uranium mill tailings sites (40 CFR 192). The AML program portion was completed in accordance with state of Wyoming guidance for the AML program. The DOE obtained NRC concurrence on the completion of remedial action on March 4, 1992.

2.2 FINAL SITE CONDITIONS

2.2.1 Description and location of disposal site area

The Spook disposal site is located in east-central Wyoming in Converse County. The site is surrounded by large, privately owned ranches that have been owned by single families for generations and used for grazing sheep and or cattle. There are two ranches with an estimated average of ten year-round residents within 3 mi (5 km) of the Spook site. There are no towns within 10 mi (16 km). Casper, Wyoming, is 48 mi (77 km) southwest of the Spook site; Glenrock and Douglas, Wyoming, are 31 mi (50 km) and 36 mi (56 km), respectively, south of the site. The 13-acre (5-ha) site is located on an unpaved road off of County Road 31. It is marked by warning signs but otherwise is not easily recognized because the contouring and vegetation matches the surrounding reclaimed area. Figure 2.1 provides directions to the site.

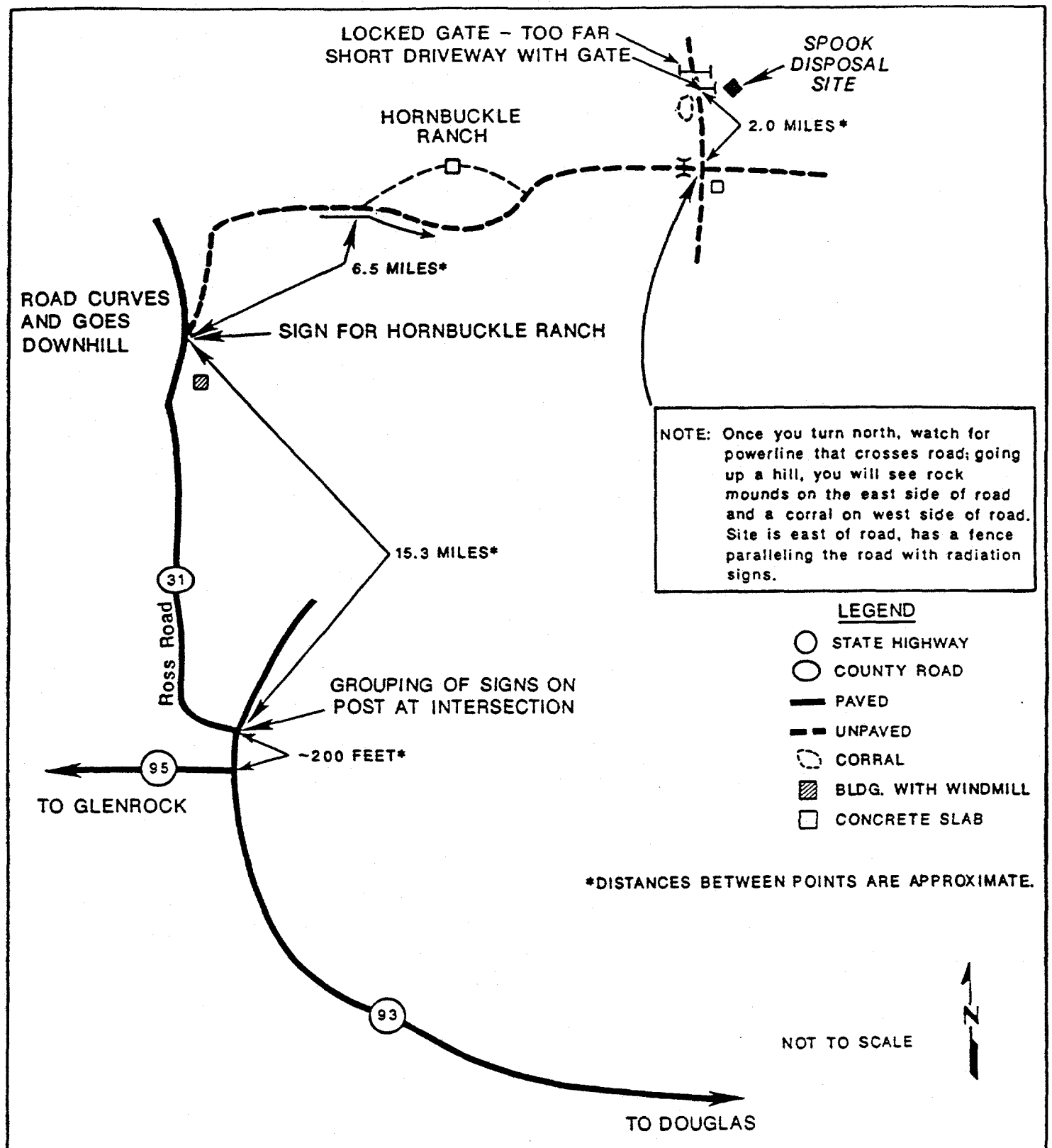

FIGURE 2.1
DIRECTIONS TO THE SPOOK DISPOSAL SITE IN CONVERSE COUNTY, WYOMING

The 13-acre (5-ha) disposal site is not fenced, so it is always accessible. Because the disposal cell has been contoured to match the surrounding topography, the site is rather innocuous and security measures are not expected to be necessary.

The topography in the area consists of flat areas and rolling hills that are sparsely vegetated. The elevation of the site is between 5030 and 5160 ft (1530 to 1570 m). Mining and exploratory activity for oil and gas, uranium, and coal has occurred throughout the area. Vegetation in the area consists of native grasses and sagebrush. Cottonwoods are located along the Dry Fork of the Cheyenne River, 1 mi (1.6 km) from the site. The Dry Fork is the nearest body of water and is an ephemeral tributary to the Cheyenne River. Winters are cold, with monthly average minimum temperatures ranging from 7° to 11°F (-14° to -11°C), with a minimum monthly temperature of -30°F (34°C). Snow often continues to fall through April. The EA of the Spook remedial action provides additional description of environmental components (DOE, 1989)

2.2.2 Disposal cell design

The contaminated materials are buried in the open uranium pit mine, above a 3-ft (1-m) foundation layer in the south-central portion of the pit. The disposal cell is covered with approximately 45 ft (14 m) of low-permeability soil materials from the overburden piles and coarse-grained materials to encourage runoff around the pile. Figures 2.2 and 2.3 provide planar and cross-sectional views of the disposal cell. The disposal cell has 2:1 sideslopes and a topslope of approximately 3 percent. The maximum height of the disposal cell is 54 ft (16 m). Burial of the Spook contaminated materials was designed to eliminate potential problems related to surface deterioration. Modelling performed on the engineering design indicates that it would be highly unlikely that gullying over the disposal cell would ever affect the integrity of the buried materials (DOE, 1990). Positive drainage has been established over the disposal cell to prevent future erosion. Additional detail on the remedial action is found in the RAP and final completion report (DOE, 1990; MKF, 1991).

The surface of the site has been contoured to approximate pre-mining topographic conditions with positive drainage established above the buried disposal cell. All disturbed areas have been successfully seeded with native grass species. The final site conditions, including all surveillance features, are described in the final completion report (MKF, 1991).

The condition of the overburden materials covering the tailings embankment and the former open pit uranium mine will be monitored for settling, slumping, erosion, vegetation changes, and land use changes. The 200-ft (60-m) buffer zone around the disposal site out to the site boundary will be monitored for any changes that may threaten the integrity of the backfilled embankment/pit area. Any channeling, gullying, or other indications of erosion, settling, or slumping will be described in detail.

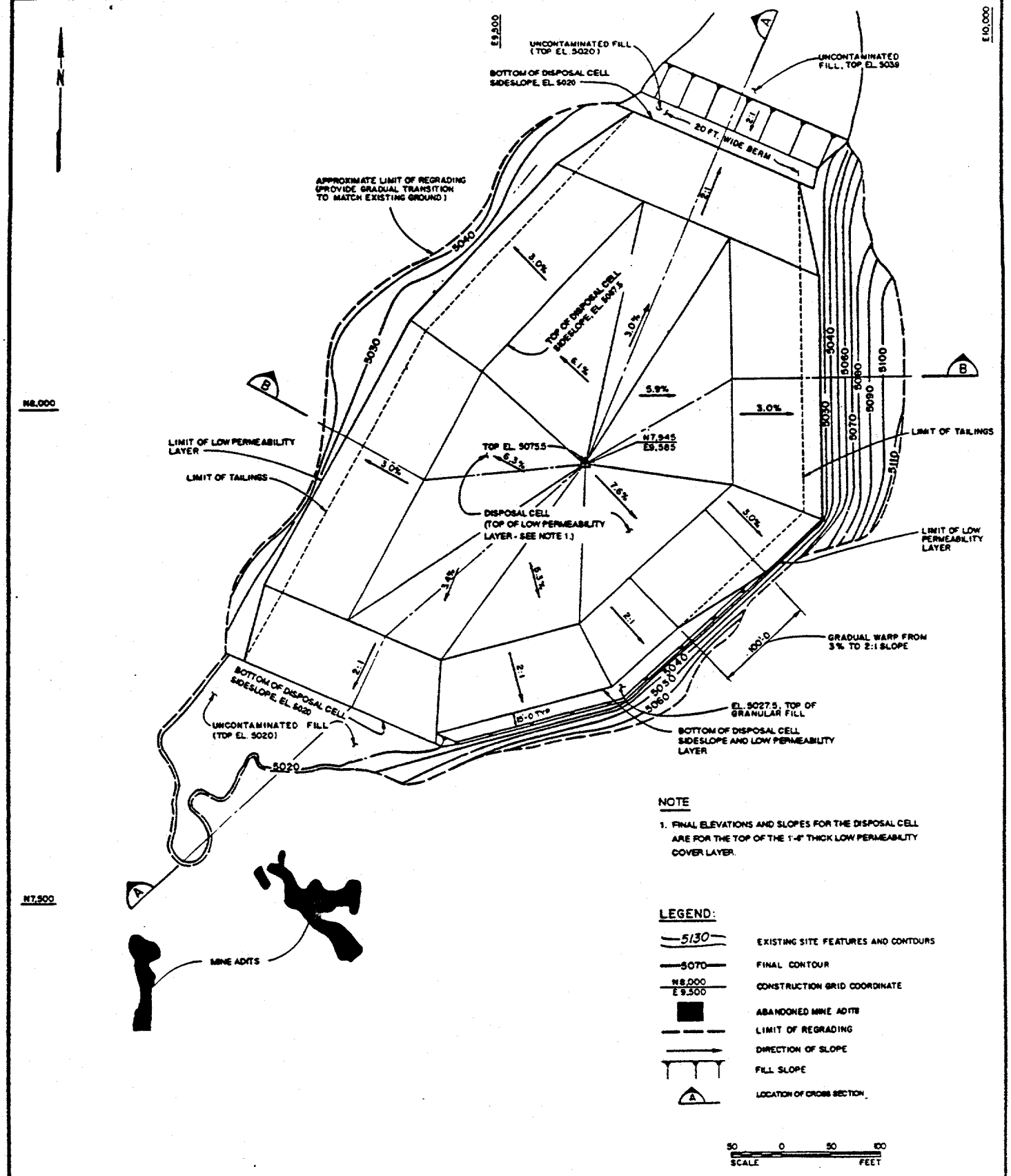

NOTE

1. FINAL ELEVATIONS AND SLOPES FOR THE DISPOSAL CELL ARE FOR THE TOP OF THE 1'-6" THICK LOW PERMEABILITY COVER LAYER.

LEGEND:

- 5130 — EXISTING SITE FEATURES AND CONTOURS
- 5070 — FINAL CONTOUR
- N8,000 / E9,500 — CONSTRUCTION GRID COORDINATE
- ABANDONED MINE ADITS
- LIMIT OF REGRADING
- DIRECTION OF SLOPE
- FILL SLOPE
- A — LOCATION OF CROSS SECTION

50 0 50 100
SCALE FEET

MKF, 1991.

FIGURE 2.2
PLAN VIEW OF THE SPOOK DISPOSAL CELL IN CONVERSE COUNTY, WYOMING

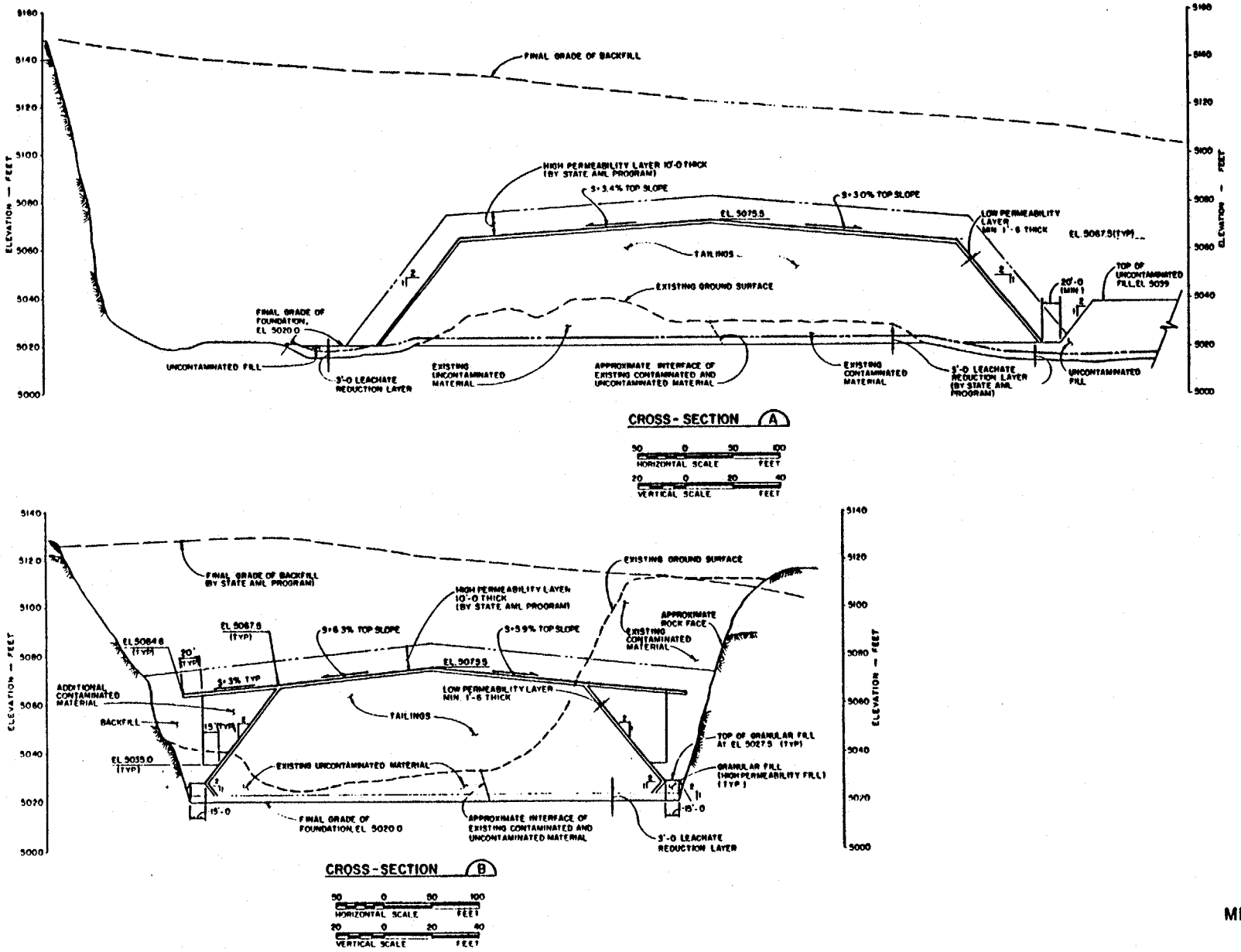

MKF, 1991.

FIGURE 2.3

CROSS-SECTIONAL VIEWS OF THE SPOOK DISPOSAL CELL IN CONVERSE COUNTY, WYOMING

3.0 SITE DRAWINGS AND PHOTOGRAPHS

At the completion of the remedial action, disposal site as-built conditions were documented with as-built drawings and photographs. This information will be used to illustrate baseline conditions against which future conditions at the disposal site can be compared.

A site atlas is being prepared and will be transmitted to GJPO when complete. It will include a vicinity map, a topographic map, and a disposal site map. The site atlas will be updated, as necessary, after each site inspection.

All drawings, maps, and photographs will be archived in the permanent Spook site file at GJPO (see Section 10).

3.1 DISPOSAL SITE MAPS AND DRAWINGS

3.1.1 Disposal site vicinity map

A disposal site vicinity map and will be placed in the site atlas in the permanent Spook site file (see Section 10). The map will encompass an area with maximum radius of 3 mi (5 km) from the disposal site, and will include the following: the disposal site boundary, the disposal cell, land ownership and mineral claims around the disposal site, longitude and latitude, section, township, range, principal meridian, and roads.

The vicinity map will be updated, as necessary, after each scheduled site inspection. If changes to the map are required, a new map will be prepared and will include the revision number and the year it was revised.

3.1.2 Disposal site topographic map

The disposal site topographic map was prepared immediately following completion of the remedial action (MKF, 1991). The site topographic map was compiled from a final topographic survey of the disposal site area. The final topographic survey was done in accordance with the standards of the Manual of Photogrammetry, Fourth Edition (ASP, 1980). The following specifications were used in developing the map: a scale of 1 in = 200 ft (1 cm $\simeq$ 25 m), a contour interval of 2 ft (0.6 m) and coverage of the disposal site and an area of 0.25 mi (0.4 km) around the site perimeter.

The disposal site topographic map will be included in the site atlas, which will be maintained as part of the permanent Spook site file at the GJPO (see Section 10).

3.1.3 Disposal site map

The disposal site map was compiled using the disposal site topographic map as a base map. In addition to topography, the map defines the following:

- Disposal site property boundaries, fences, corrals, gates, and access roads.
- Outline of disposal cell boundaries.
- Wells and access roads.
- Permanent site surveillance features (e.g., monuments, markers, and signs).
- Site coordinate system.

The Spook disposal site map is presented in Plate 2.

If the disposal site map is updated, the revised map will include the year of revision and the revision number.

The disposal site map will serve as the base map for site inspections. A new, separate inspection map will be prepared after each inspection. Each site inspection map will indicate the year of the inspection and the type of inspection. All site base maps and periodic inspection maps will be placed in the permanent Spook site file.

3.1.4 Disposal site as-built drawings

The Remedial Action Contractor has provided a set of as-built drawings that illustrate final disposal cell construction and final disposal site conditions (MKF, 1991). The as-built drawings were used to prepare the disposal site map. These drawings may be used to document changes in physical site conditions or changes to the disposal cell over time, and may be used for developing corrective action plans, if required.

All as-built drawings will be filed in the site atlas, which is maintained in the Spook permanent site file (see Section 10).

3.2 SITE BASELINE PHOTOGRAPHS

A photographic record of the final site conditions at the Spook disposal site will be filed in the permanent Spook site file (see Section 10). This record consists of a series of aerial and ground photographs that provide a baseline visual record of final site construction activities and final site conditions to complement the as-built drawings. In addition, the final completion report for the disposal site contains a complete set of photographs that document each phase of construction (MKF,

1991). The post-construction photographs provide an orientation tool prior to site inspections and provide a baseline record of surveillance features.

3.3 SITE AERIAL PHOTOGRAPHS

Aerial photographs of the Spook disposal site were taken in 1989 after the completion of the surface remedial action. The purpose of the aerial photographs is to provide a permanent record of site conditions to be used to monitor changes (e.g., erosional patterns, vegetation changes, land use) over time, and to provide a useful orientation tool prior to inspections of the disposal site. The need for new aerial photographs will be assessed at 5-year intervals unless unusual conditions require assessment on a more frequent basis. Details of aerial photo requirements are given in Table 3.1.

3.4 SITE INSPECTION PHOTOGRAPHS

Photographs will be taken during site inspections to document conditions at the disposal site and to provide a continuous record for monitoring changing conditions over time. The baseline photographs taken after completion of the remedial action can be compared to ground photographs taken during site inspections to indicate if there are any significant differences in site appearance.

A record of all site inspection photographs will be recorded on a photo log (see Attachment 3). Each photograph will be recorded individually on the photo log form. An appropriate description of the feature photographed, including azimuth, will be entered on the log form. Copies of the photographs and the photo log will be included in the annual site inspection reports.

Whenever possible, a photograph should include a reference point such as a survey monument, boundary monument, or site marker. For natural features such as slopes and vegetation, a north arrow and scale should be included for reference.

For specific areas where the photograph is used to monitor change over time, the distance from the feature and azimuth will be recorded, and all subsequent photographs will be taken from the same orientation to provide a more accurate picture of changing conditions. The magnetic declination of the compass should be corrected for true north. This information will be included in the inspection report and photo log.

All site inspection photographs taken, as well as corresponding photo log forms, shall be maintained in the permanent Spook site file.

Table 3.1 Aerial photography specifications for the Spook disposal site

AREA TO BE PHOTOGRAPHED

Final disposal site plus a minimum of 0.25 mi (0.4 km) beyond site boundaries.

PRODUCTS TO BE DELIVERED

One set of vertical color, infrared stereo contact prints, 9-in by 9-in (23 cm by 23 cm), scale 1 in = 200 ft (1 cm = 25 m) (representation fraction 1:2500); double weight, glossy, not trimmed.

One index map, scale 1 in = 200 ft (1 cm = 25 m); flight lines and frame numbers will be provided.

One set of 2 each of low and high oblique photographs (and negatives) in natural color, 8-in by 10-in (20-cm by 25-cm) or 9-in by 9-in (23-cm by 23-cm) contact prints.

FLIGHT DATA

Immediately after remedial action is complete, then re-evaluate at 5-year intervals once the long-term surveillance license becomes effective.

CAMERA

Precision, 9-in by 9-in (23-cm by 23-cm) format for vertical photos. A 35-millimeter (single lens reflex) or larger format camera for oblique photos is acceptable.

FILM

Eastman-Kodak Aerochrome Infrared 2443, or its equivalent, for vertical photos. Eastman-Kodak Ektacolor or its equivalent for oblique photos.

FILTER

Wratten No. 12 or 15 for infrared photos. Skylight filter for color photos.

FLIGHT LINE COVERAGE

Sixty percent and overlap; 30 percent average side overlap.

GROUND CONTROL

Control stations will be second order, Class 1 for horizontal control and third order for vertical control [Standard U.S. Geological Survey (USGS) map accuracy specifications].

4.0 PERMANENT SITE SURVEILLANCE FEATURES

The permanent surveillance features at the Spook disposal site include survey and boundary monuments, site markers, an entrance sign, and perimeter signs (Figure 4.1 and as-built site drawing SPK-PS-10-0301 of MKF, 1991). Eight boundary monuments and ten perimeter signs define the perimeter of the irregularly shaped site area. Two site markers are located at the extreme ends of the disposal cell and three survey monuments provide survey orientation.

The surveillance features were constructed and emplaced in accordance with the specifications described below. The coordinates of the survey and boundary monuments are given in Table 4.1. The survey and boundary monuments were surveyed to second-order survey standards. Additional detail is provided in the surveillance and maintenance subcontract document for the site (MKF, 1989).

4.1 SURVEY MONUMENTS

The three survey monuments are made of reinforced concrete with a Berntsen Model RT-1 metal marker cast into its top (Figure 4.2). There is a magnet and reinforcing bars to allow for discovery with a metal detector should the monuments become buried over time. The monument caps extend approximately 4 in (10 cm) above the ground surface.

The three survey monuments establish a permanent horizontal control based on the project survey control point located at the northeast corner of Section 28, T38N, R73W, 6th Principal Meridian, Converse County, Wyoming.

4.2 BOUNDARY MONUMENTS

Berntsen Federal aluminum survey monuments, Model A-1, were used for the eight boundary monuments. Ceramic magnets are epoxied in the cap and base and are oriented for maximum detectability if they become covered. The cap of each monument is 12 in (30 cm) above ground. The base is set in precast concrete (Figure 4.3).

4.3 SITE MARKERS

The two unpolished granite site markers are installed above the north and south ends of the disposal cell. The site markers are set in a bed of reinforced concrete that extends 5.5 ft (1.7 m) below ground surface. A message on the site markers identifies the Spook disposal cell, the boundary of the site, the date of closure, and estimates of the tonnage and radioactivity of tailings (Figure 4.4). The markers are oriented such that the north arrow symbol on the marker points to the north.

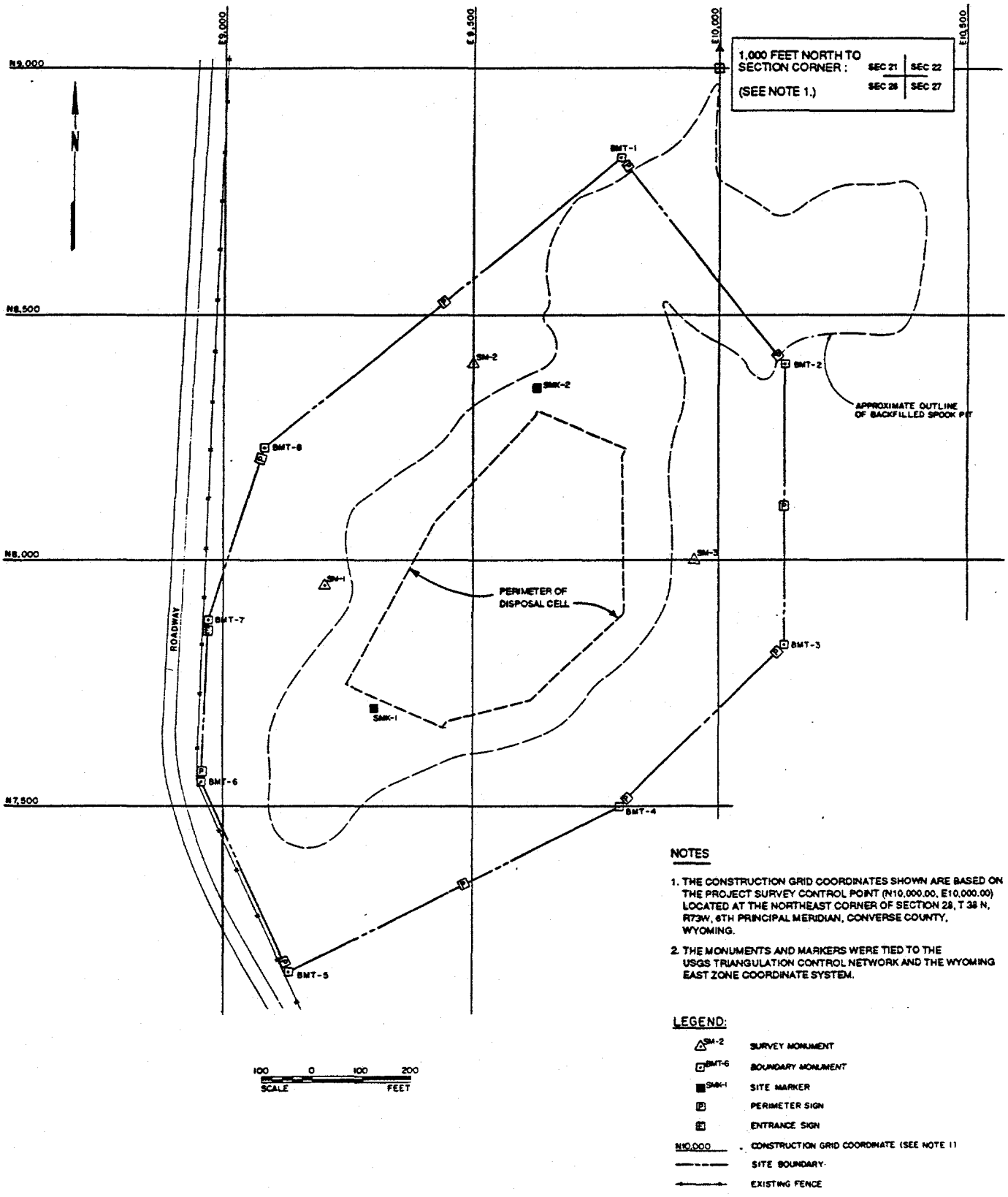

NOTES

1. THE CONSTRUCTION GRID COORDINATES SHOWN ARE BASED ON THE PROJECT SURVEY CONTROL POINT (N10,000.00, E10,000.00) LOCATED AT THE NORTHEAST CORNER OF SECTION 28, T 38 N, R73W, 6TH PRINCIPAL MERIDIAN, CONVERSE COUNTY, WYOMING.
2. THE MONUMENTS AND MARKERS WERE TIED TO THE USGS TRIANGULATION CONTROL NETWORK AND THE WYOMING EAST ZONE COORDINATE SYSTEM.

LEGEND:

- SM-2 — SURVEY MONUMENT
- BMT-6 — BOUNDARY MONUMENT
- SMK-1 — SITE MARKER
- P — PERIMETER SIGN
- E — ENTRANCE SIGN
- N10,000 — CONSTRUCTION GRID COORDINATE (SEE NOTE 1)
- SITE BOUNDARY
- EXISTING FENCE

MKF, 1991.

FIGURE 4.1
LOCATIONS OF PERMANENT SURVEILLANCE FEATURES AT THE SPOOK SITE IN CONVERSE COUNTY, WYOMING

Table 4.1 Locations of monuments and markers

Symbol	Coordinates[a]
Survey monuments	
SM-1	N 7,950.00 E 9,200.00
SM-2	N 8,400.00 E 9,500.00
SM-3	N 8,000.00 E 9,950.00
Boundary monuments	
BMT-1	N 8,820.00 E 9,800.00
BMT-2	N 8,400.00 E 10,130.00
BMT-3	N 7,830.00 E 10,130.00
BMT-4	N 7,500.00 E 9,800.00
BMT-5	N 7,165.00 E 9,130.00
BMT-6	N 7,550.00 E 8,955.00
BMT-7	N 7,880.00 E 8,970.00
BMT-8	N 8,230.00 E 9,080.00
Site markers	
SMK-1	N 7,700.00 E 9,300.00
SMK-2	N 8,350.00 E 9,630.00

[a]The coordinates are based on the project survey control point (N 10,000.00, E 10,000.00) located at the northeast corner of Section 28, T38N, R73W, 6th Principal Meridian, Converse County, Wyoming.

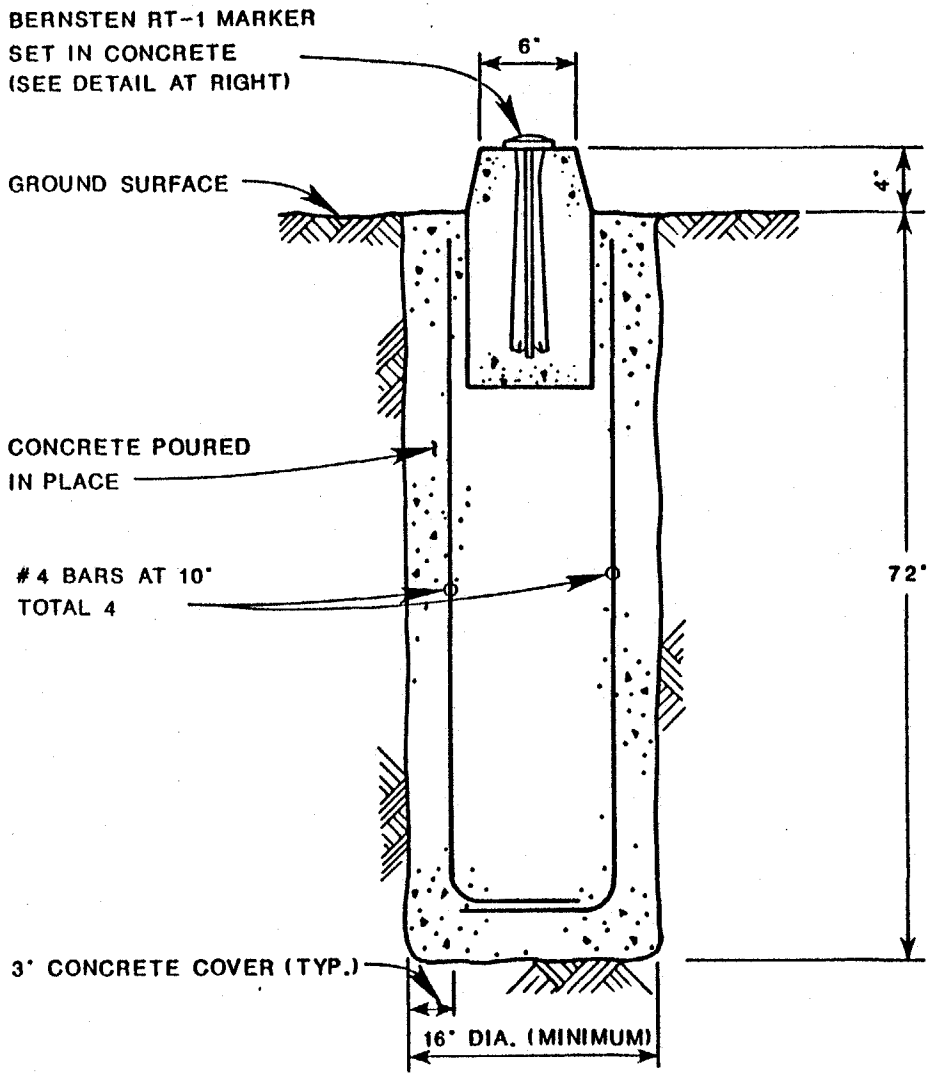

SCHEMATIC - NOT TO SCALE

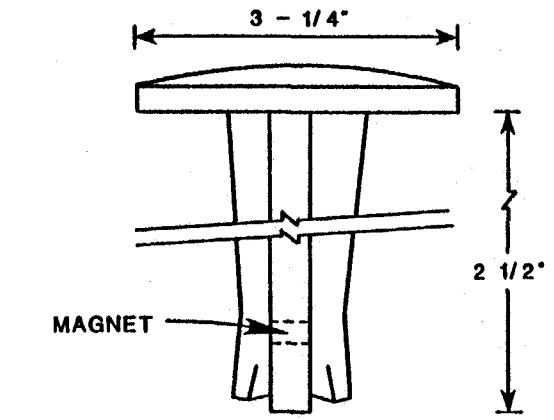

SIDE VIEW

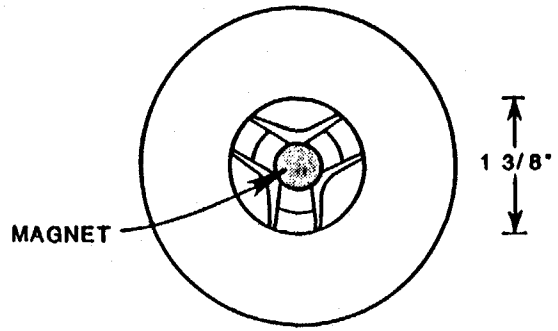

BOTTOM VIEW

SCHEMATIC - NOT TO SCALE

DETAIL
BERNTSEN RT-1
MARKER

FIGURE 4.2
SURVEY MONUMENT AT THE
SPOOK DISPOSAL SITE IN CONVERSE COUNTY, WYOMING

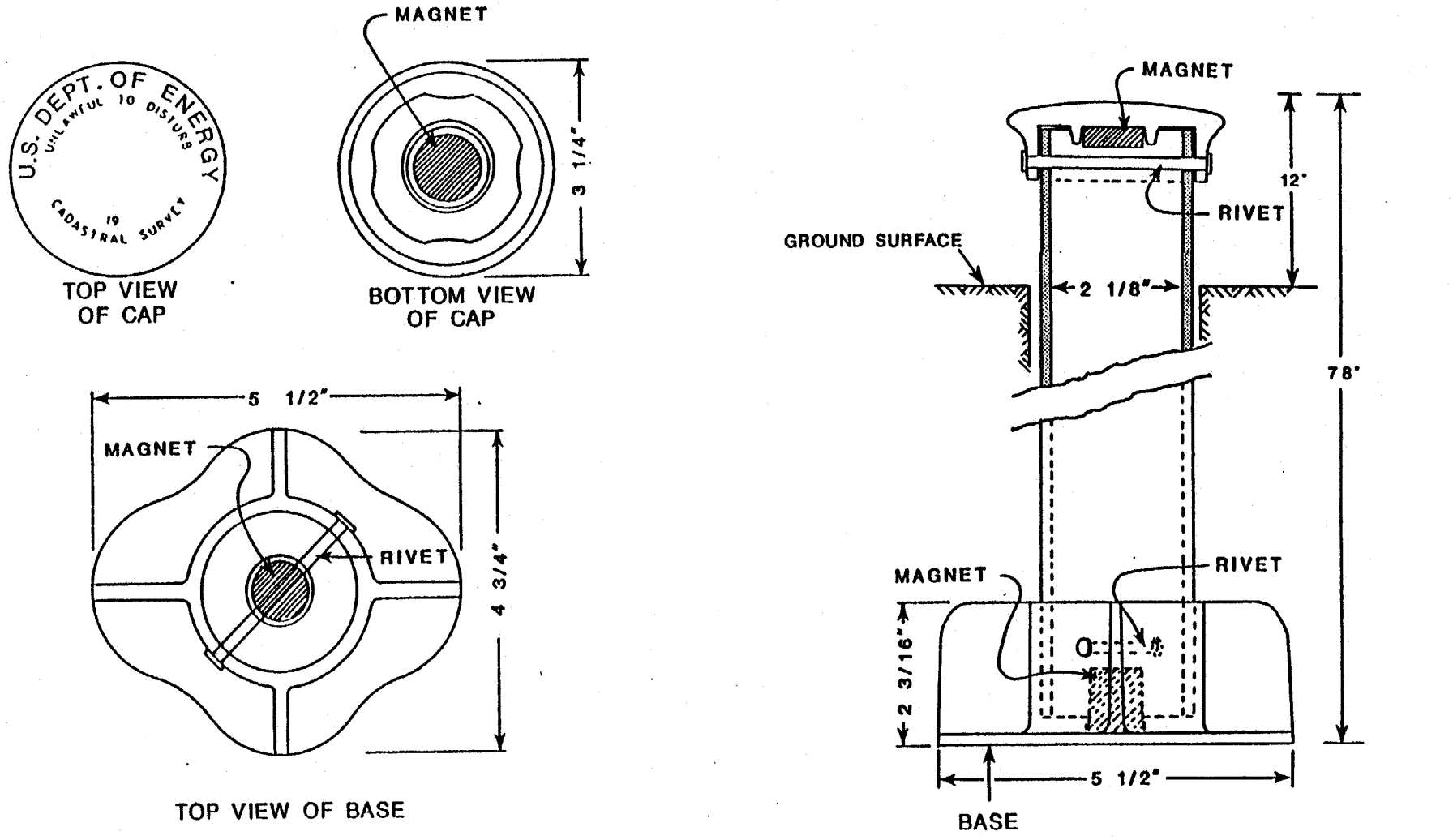

FIGURE 4.3
BOUNDARY MONUMENT AT THE
SPOOK DISPOSAL SITE IN CONVERSE COUNTY, WYOMING

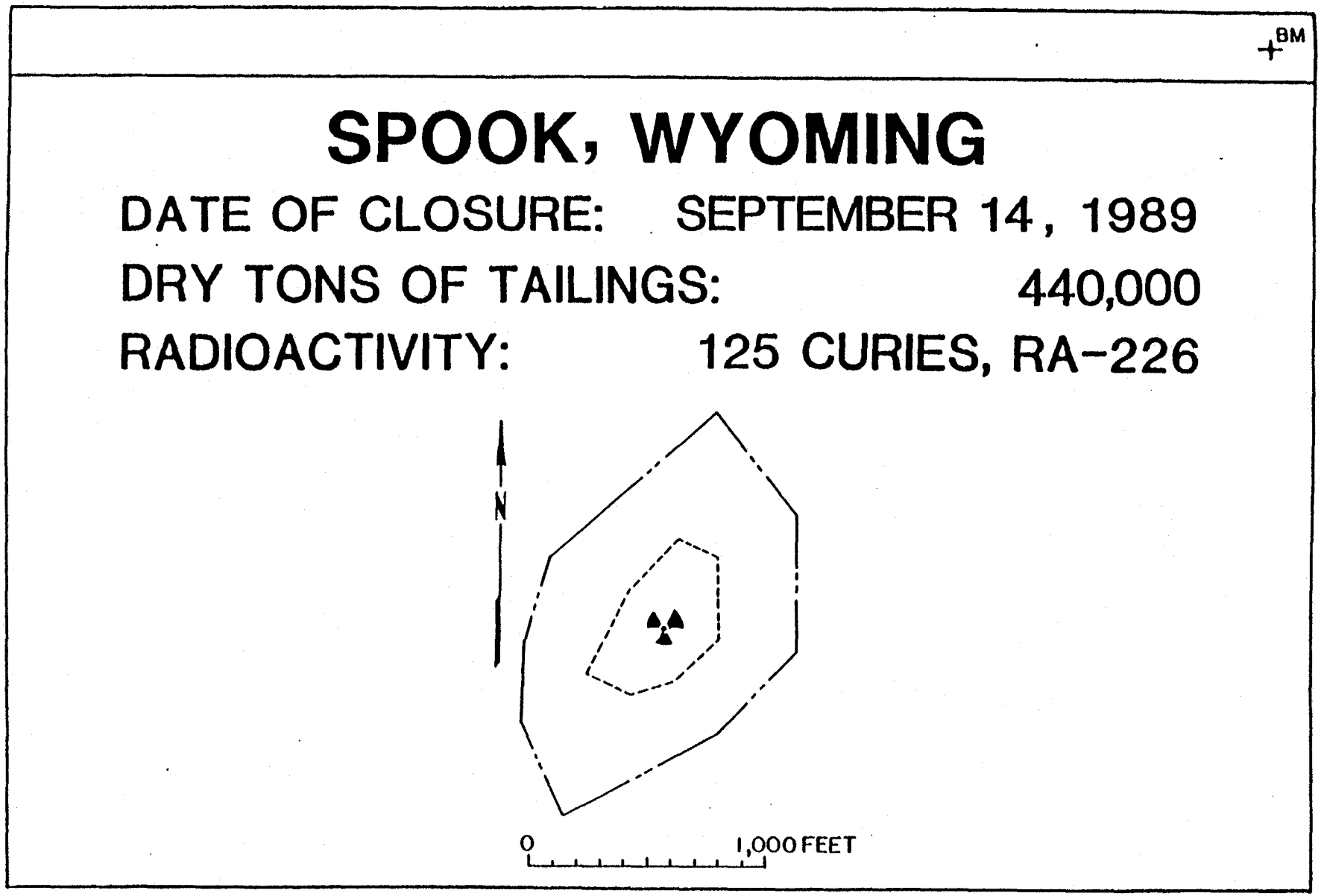

NOTE: MINIMUM DEPTH OF INCISING TO BE 1/4".

FIGURE 4.4
SITE MARKER MESSAGE AT THE SPOOK DISPOSAL SITE IN CONVERSE COUNTY, WYOMING

4.4 ENTRANCE AND PERIMETER SIGNS

There is one entrance sign and ten perimeter signs at the Spook site. Each sign is mounted on a line post. These signs display the international symbol indicating the presence of radioactive materials and state that the Spook site is Government property, that it contains uranium mill tailings, and that trespassing is forbidden. The entrance and perimeter signs are of the dimensions and specifications shown in Figure 4.5.

4.5 SETTLEMENT PLATES

There are no settlement plates at the Spook disposal site.

4.6 ADDITIONAL SITE SURVEILLANCE REQUIREMENTS

There are no reference posts or any other additional site surveillance features at the Spook disposal site.

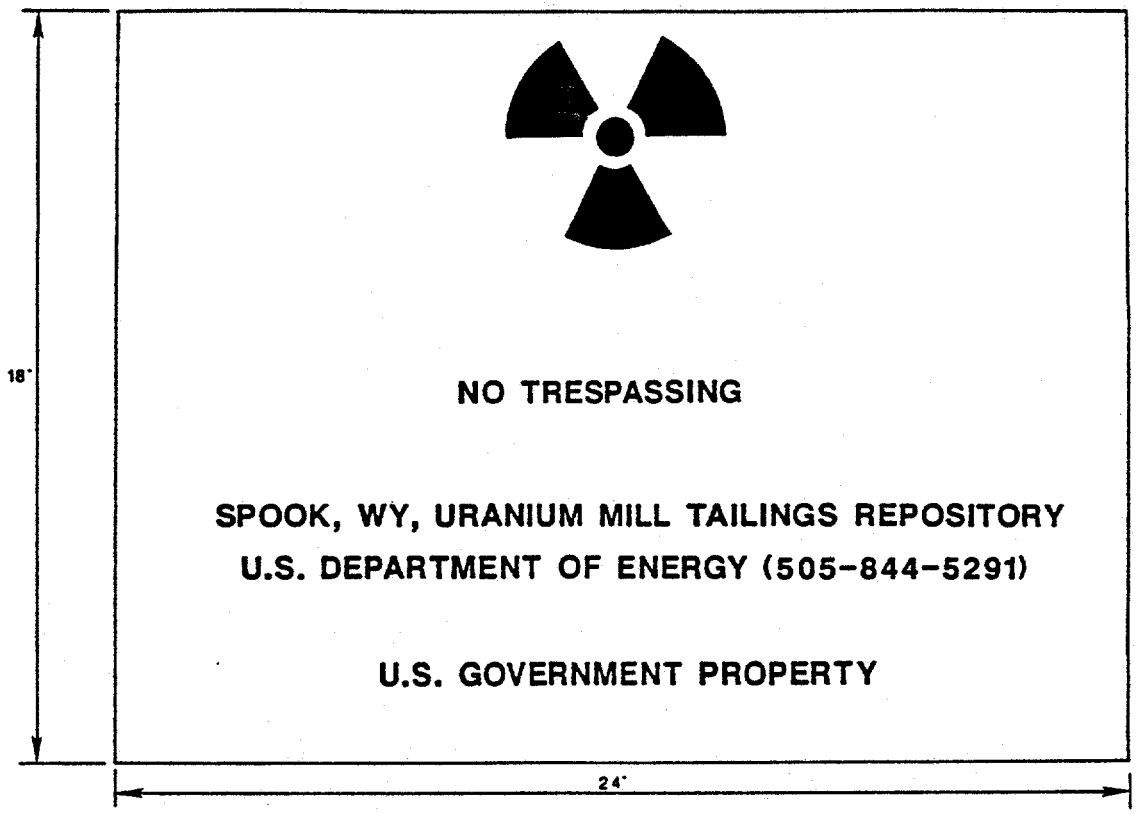

ENTRANCE SIGN

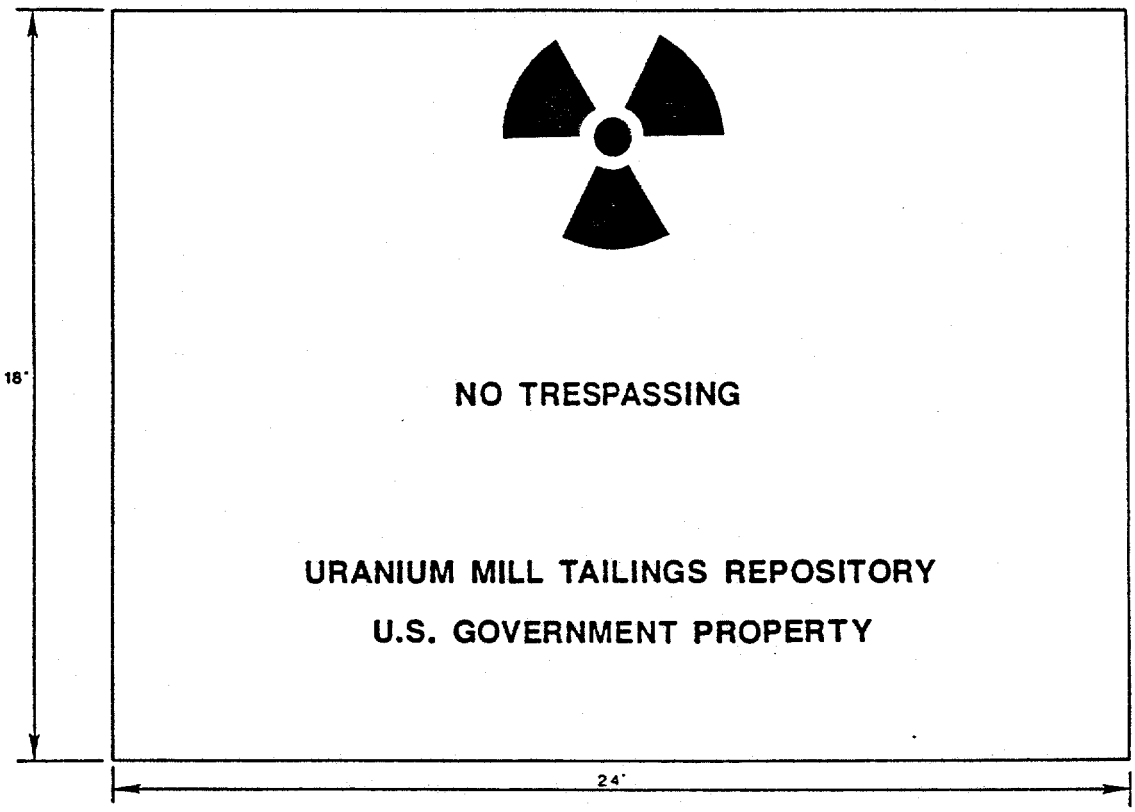

PERIMETER SIGN

FIGURE 4.5
ENTRANCE AND PERIMETER SIGNS AT THE SPOOK DISPOSAL SITE IN CONVERSE COUNTY, WYOMING

5.0 GROUNDWATER MONITORING

The need for groundwater monitoring at the Spook disposal site was evaluated in accordance with the NRC regulations in 10 CFR 40.27(b)(2), and guidelines established by the DOE (DOE, 1992). Based on an evaluation of site characterization data, it has been determined that a program to monitor groundwater is not required because groundwater in the uppermost aquifer is of limited use (Class III). The Class III designation is based on the fact that groundwater in the uppermost aquifer is not currently or potentially a source of drinking water in the area. This is because it contains widespread ambient uranium and selenium contamination, resulting from naturally occurring conditions and from effects of broad-scale human activity not related to uranium milling operations. Consequently, groundwater cannot be effectively cleaned up for drinking or other beneficial purposes using treatment methods reasonably employed in public water supply systems. A narrative supplemental standard has been applied to the site that does not include numerical concentration limits or a point of compliance (40 CFR 192.21(g)).

5.1 GROUNDWATER CHARACTERIZATION

To comply with the proposed EPA groundwater protection standards for remedial action at inactive uranium mill tailings sites (40 CFR 192), the DOE has characterized the hydrogeology, groundwater quality, and water resources at the Spook site. A detailed discussion of site characterization is available in Appendix D of the Spook RAP (DOE, 1990).

Groundwater occurs beneath the Spook site in two sandstone units within the Tertiary Wasatch Formation. The upper sandstone unit is considered the uppermost aquifer beneath the site. Groundwater is unconfined in the upper sandstone unit and confined in the lower sandstone unit. The upper and lower sandstone units are separated by an aquitard consisting of a thick, laterally extensive silty shale unit. There is no observed hydraulic interconnection between the upper and lower sandstone units in the vicinity of the Spook site.

In the upper sandstone unit groundwater flows predominantly to the northeast, under an average hydraulic gradient of 0.005. The average hydraulic conductivity in the upper sandstone unit is 15 ft/day (5.3×10^{-3} cm/s) and the average linear groundwater velocity is 0.38 ft/day (1.34×10^{-4} cm/s). In the lower sandstone unit groundwater flows predominantly to the southeast, under an average hydraulic gradient of 0.01. The average hydraulic conductivity in the lower sandstone unit is 0.07 ft/day (2.47×10^{-4} cm/s). Recharge and discharge of groundwater in the upper and lower sandstone units are principally by groundwater underflow.

Background groundwater quality in the upper and lower sandstone units has been determined by analysis of groundwater samples from monitor wells in areas adjacent to the Spook tailings site that have not been affected by uranium recovery operations. In the upper sandstone unit, ambient background groundwater quality is affected by the presence of naturally occurring mineralization related to an alteration front underlying the Spook site, and is characterized by concentrations of

uranium and selenium that exceed the proposed EPA MCLs. In the middle shale unit and the lower sandstone unit, concentrations of all constituents in groundwater are below the proposed EPA MCLs.

Contaminants in groundwater related to the tailings pile are present in the saturated zone of the upper sandstone unit and form a plume that extends approximately 4000 ft (1220 m) downgradient from the Spook pit with a maximum width of approximately 2500 ft (760 m) (based on nitrate concentrations above background levels). In the upper sandstone unit, concentrations of nitrate, uranium, selenium and chromium, and activities of radium-226 and -228 in groundwater exceed the proposed EPA MCLs and maximum background concentrations. Elevated concentrations of uranium and selenium, and activities of radium-226 and -228 result from uranium mining and milling activities and from natural occurrences related to the alteration front. High concentrations of nitrate do not occur naturally in groundwater in the upper sandstone unit, and concentrations of nitrate above a background level of 4 mg/L are a result of the uranium milling operations. For this reason, the conservative nitrate anion may be used as an indicator of the maximum extent of tailings-related contamination in groundwater in the upper sandstone unit. Groundwater in the middle shale unit and the lower sandstone unit is not contaminated as a result of milling operations at the Spook site, and concentrations of all constituents are below the proposed EPA MCLs.

Groundwater from the upper sandstone unit in the vicinity of the Spook site is not used as a source of drinking water or for any other beneficial purposes. This is because of the poor groundwater quality resulting from naturally occurring uranium mineralization, human activities related to uranium exploration and mining, and the marginal yield. Alternative supplies of good quality groundwater are readily available from the confined lower sandstone unit, or from deeper confined aquifers in the lower part of the Wasatch Formation and in the underlying Fort Union Formation. Several water supply wells in the vicinity of the Spook site derive groundwater from aquifers below the upper sandstone unit for domestic purposes and stock watering.

5.2 GROUNDWATER MONITORING PROGRAM

No groundwater monitoring is required for the long-term surveillance program at the Spook disposal site for compliance with groundwater protection standards or for demonstration of disposal cell performance. The DOE has adequately justified that the proposed supplemental standards are protective of human health and the environment and has demonstrated that the proposed remedial action comes as close to meeting the otherwise applicable standards as is reasonable under the circumstances. Consequently, the NRC staff has concurred in the use of supplemental standards at the Spook disposal site and the exemption of both the compliance and performance elements of groundwater monitoring requirements (NRC, 1989).

The rationale for not monitoring groundwater is discussed in Appendix E of the Spook RAP (DOE, 1990). A copy of the transmittal letter for the technical evaluation report from the NRC concurring in the RAP and the groundwater protection strategy is provided in Attachment 1.

6.0 SITE INSPECTIONS

Inspections of the Spook site will be scheduled to evaluate surface and subsurface conditions on a routine basis or in response to new information. Site inspections are an important aspect of the long-term surveillance program because they can alert the DOE to potential problems before they become difficult or expensive to reverse, and can provide an early warning that specific elements need more careful evaluation and monitoring. Three types of site inspections are as follows:

- Annual or scheduled site inspections.
- Follow-up inspections.
- Contingency inspections.

Each site inspection must be documented by a report on the findings of the inspection; copies of the report must be forwarded to the NRC, the state of Wyoming, and to the permanent site file. Annual or scheduled site inspection reports are to be completed and filed within 90 days after the last annual (or scheduled) site inspection in that calendar year, and within 60 days after any other type of inspection. Additional details for preparing and conducting site inspections are provided in the draft document, "Guidance for Implementing the UMTRA Project Long-term Surveillance Program" (DOE, 1992).

6.1 INSPECTION FREQUENCY

Inspections of the Spook site will be conducted annually for 5 years, beginning with the year of licensing. At the end of the 5 years, the DOE will evaluate the necessity for subsequent inspections and propose a future site inspection schedule. The recommendation will be based on an evaluation of the annual reports and any other reports that have been filed due to the need for maintenance or unscheduled events. Based on this recommendation, the DOE will request that the NRC review and approve the proposed change in frequency of inspections. The state of Wyoming will be notified by the DOE of any change or amendment to the LTSP. Subsequent inspections would be considered a scheduled site inspection.

6.2 INSPECTION TEAM

The inspection team will consist of a chief inspector and one or more assistants knowledgeable in the processes that could adversely affect the site (i.e., identifying geomorphic agents of change and evaluating plant vigor). The team will be selected to ensure that sufficient professional expertise is available to adequately evaluate the surface and implied subsurface conditions of the site.

6.3 PREPARATION FOR INSPECTION

Prior to conducting an inspection, the following steps must be taken:

- Review this LTSP (and any amendments), the previous site inspection report and site inspection map, and any maintenance or corrective action reports.
- Review the site inspection checklist (Attachment 4). Revise the checklist to incorporate new information, as necessary.
- Contact site team members and schedule the site inspection for early summer or for a time when the condition of the vegetation on the site can be accurately assessed.
- Notify the state of Wyoming's Department of Environmental Quality Land Quality Division and adjacent land owners that an inspection will be conducted. Determine whether or not any local or state concerns need to be addressed during the site inspection.
- Ensure that all necessary equipment needed to conduct the site inspection is available.
- Verify the DOE 24-hour telephone number and appropriate state telephone numbers and contacts. Arrange to change entrance sign, if needed.
- Notify the NRC for possible attendance at the inspection.
- Verify and update the names and telephone numbers of all parties with whom notification agreements have been executed.
- Adjust the Brunton compass's magnetic declination for the Spook site (currently 12.5 degrees east of north).

6.4 SITE INSPECTION AND INSPECTION CHECKLIST

The site inspection should evaluate the designated site area under title to the DOE and all areas immediately adjacent to the site. During the site inspection, all observations are to be recorded and described using the site inspection checklist as a guide (Attachment 4), the site inspection map, a field notebook, and photographs. Observations and photographic stations should be recorded on the field maps. After the inspection is completed, these maps are to be drafted and retained in the permanent site file.

Gate, lock, and signs: There are no gates or locks at the site. Signs are to be inspected for signs of damage or for the need for maintenance or repair. An effort should be made to determine the cause of any damage and whether it was inadvertent or purposeful. Missing or damaged signs should be noted and scheduled for replacement, if warranted.

Monuments and markers: Monuments and markers are to be examined for evidence of disturbance. If disturbance or damage is evident, a recommendation for maintenance or repair must be made.

Surface area: Traverses should be walked along and within the site area. The area should be closely examined for evidence of differential settling, subsidence, or cracks; close attention should be paid to areas above the former mine adits and along the margins of the pit wall. The area should be examined for evidence of vandalism or other deliberate intrusion. The vigor of the vegetation should be evaluated, paying attention to a possible shift in the vegetation to unwanted plant species.

The as-built drawings and the site inspection checklist are to be used as a guide for recording inspection activities and observations.

Photographic record: Ground photographs must be taken as part of the site inspection. Site conditions are to be documented by photographs to provide a record of developing trends and to enable the DOE to evaluate the need for and extent of future activities.

Any site feature or condition that requires the inspectors to make a written comment, explanation, or description should be photographed if possible. A photo log should be used for recording the photographs (Attachment 3). The photo sites should be specified in relation to a survey monument, boundary monument, site marker, or other permanent feature. The number of photographs, the view angles, and the lenses used is up to the judgment of the inspectors, keeping in mind site and lighting conditions and the goal of having sufficient photographs for agency review.

6.5 SITE INSPECTION MAP

A new site inspection map will be prepared following each inspection using the site base map as a base. This map must include the following:

- Inspection traverses.
- Photograph locations.
- Locations and descriptions of any new, anomalous, or unexpected features.
- Features identified during previous inspections for observation or monitoring.
- Date of inspection.

6.6 REPORTING REQUIREMENTS

Upon completion of the field inspection, Section D of the site inspection checklist (Attachment 4) must be completed and the certification statement signed. Overlays for the as-built drawings or revised drawings should be developed that note any potential problems or other site conditions that may require future attention. The revised drawings should be labeled with the type of site inspection and the date the site inspection was performed.

All photographs must be logged on a site inspection photo log (see Attachment 5). A separate photo log should be completed for each roll of film exposed, with an entry made for each photograph taken. The completed photo logs are to be attached to the inspection checklist and paginated accordingly.

Documentary evidence of anomalous, new, or unexpected conditions or situations must be included to provide a record of developing trends and to enable the responsible agency to make reasonable decisions concerning follow-up inspections, custodial maintenance, repair, and corrective action. Photographs may be used to provide such evidence.

An annual site inspection report must be prepared that describes the surveillance activities. The site inspection report should include the information identified in Attachment 4 of this document. At a minimum, the report should include a narrative, inspection checklists, photographs and photo logs, maps, field notes, inspector qualifications, and a certification of inspection. All problems, active or potential, must be identified and described in the report, along with recommendations for follow-up inspections, custodial maintenance or repair, or corrective action, if required. Copies of the site inspection report and supporting documentation and drawings will become part of the permanent site file.

7.0 FOLLOW-UP INSPECTIONS/CONTINGENCY INSPECTIONS

7.1 FOLLOW-UP INSPECTIONS

Follow-up inspections are used to investigate and quantify specific problems detected during routine site inspections.

7.1.1 Need for inspection

Follow-up inspections should be conducted whenever the results of a routine site inspection indicate that in-depth studies are necessary to assess whether processes currently active on or near the site pose any future threat to the site if left unmodified. Follow-up inspections may be required to evaluate further the need for custodial maintenance, repair, or corrective action.

7.1.2 Field procedures

Follow-up inspections are to be made by specialists in the discipline appropriate to the problem that has been identified. For example, if erosion is the problem, the inspector(s) should be knowledgeable in evaluating erosion processes (such as a soils scientist or geomorphologist).

Procedures for a follow-up inspection have not yet been developed by the DOE; they will be defined by the DOE at the time such an inspection becomes necessary. It is conceivable that a follow-up inspection could be carried out in two or more steps. The first step would be an on-site visit to gather firsthand knowledge for the development of a plan of action to conduct the tests or studies necessary to understand the phenomenon in progress. Additional visits may then be scheduled to gather the data needed to draw conclusions and recommend corrective action.

7.1.3 Reporting requirements

Upon completion of the follow-up inspection, the DOE will analyze the information gathered, make an assessment of the situation, and prepare an inspection report describing the site conditions and, if necessary, recommendations for further action. If maintenance, repair, or corrective action is warranted, the DOE will notify the NRC and the state of Wyoming as provided in Section 9.0, Corrective Action.

7.2 CONTINGENCY INSPECTIONS

Contingency inspections are unscheduled, situation-specific inspections ordered by the DOE when it receives outside information that indicates the integrity of the site has been or may be threatened.

7.2.1 Need for inspection

The trigger event for a contingency inspection may be a large rainstorm in the watershed, the occurrence of some unusual event such as a tornado in the vicinity, or structural damage caused by humans or burrowing animals.

The DOE will be notified of unusual events at the Spook site in the following manner:

- **National Weather Service, Casper, Wyoming:** The DOE will be notified within 8 hours of a county notification of a flash flood warning or tornado warning.

- **National Earthquake Information Service, Denver, Colorado:** The DOE will be notified if the following seismic events occur:

  - Any earthquake of magnitude 3.0 or greater, within 0.3 degrees [about 20 miles (32-km)] of the site.

  - Any earthquake of magnitude 5.0 or greater, within 1.0 degrees [about 70 miles (112-km)] of the site.

- **Converse County Sheriff's Department:** The DOE will be notified of any unusual occurrences in the site area that may affect surface or subsurface stability.

7.2.2 Notification procedures

To become aware of unusual events, the DOE has requested notification from the above agencies in the event of extreme or unusual occurrences (see Attachment 5). As part of these agreements, procedures are included for maintaining and updating notification requirements. Copies of these requests are kept in the permanent site file.

7.2.3 Field procedures

Contingency inspections will be carried out by the appropriate specialists as soon as possible following notification. Procedures for a contingency inspection have not yet been developed by the DOE; they will be defined by the DOE at the time such an inspection becomes necessary. It is conceivable that a contingency inspection could be carried out in two or more steps. The

first step would be an on-site visit to gather firsthand knowledge for the development of a plan of action to conduct the tests or studies necessary to understand the phenomenon in progress. Additional visits may then be scheduled to gather the data needed to draw conclusions and recommend corrective action.

7.2.4 Reporting requirements

Once the DOE has been notified, an assessment of the situation is required by 10 CFR 40 to be submitted to the NRC within 60 days of the initial report that damage or disruption has occurred at the Spook site. At a minimum this report must include the following:

- A description of the problem.
- A preliminary assessment of the maintenance, repair, or corrective action required.
- Conclusions and recommendations.
- Assessment data, including field notes, inspection logs, photographs, and photographic logs.
- Field inspector qualifications.

Based on the conclusions in the report, it may be necessary to update the permanent site file; however, a copy of the report should remain in the permanent site file for future reference.

After the preliminary inspection/assessment report has been reviewed, the DOE must submit a corrective action plan to the NRC for approval and to the state of Wyoming within the 60-day period required by 10 CFR 40.

8.0 CUSTODIAL MAINTENANCE

Custodial maintenance will be performed at the Spook site on an as-needed basis. In general, the decision to conduct maintenance or repair will be based on the results of annual site inspections, follow-up inspections, or contingency inspections. Some examples of custodial maintenance activities that may be required include the following:

- Replacement of perimeter warning signs.
- Re-establishment of survey control and boundary monuments.

8.1 PLANNED MAINTENANCE

There is no planned maintenance for the Spook site.

8.2 UNSCHEDULED MAINTENANCE OR REPAIR

Unscheduled maintenance or repair may be necessary if signs need replacement, or other surveillance features need attention. If severe gullying is occurring, reclamation of areas that show severe erosion would be considered an unscheduled maintenance item. If any problems are identified that indicate that the disposal cell may be affected, the recommended repair action must be approved in advance by the NRC and is considered a corrective action (see Section 9.0).

8.3 CERTIFICATION AND REPORTING REQUIREMENTS FOR UNSCHEDULED MAINTENANCE OR REPAIR

The following information on unscheduled maintenance or repair must be provided in the site inspection report or documented in the permanent file:

- Summary of work required.
- Work order, purchase order, or statement of work.
- Contractor qualifications, if applicable.
- Contractor documentation of completion of work.
- DOE certification of completion of work.

After completion of the work, the contractor must submit verification of the completed work, and/or a written report, if the action is considered significant. The DOE will inspect the site as necessary and review the report before certifying that all work is completed in accordance with any required specifications. Copies of all records, documentation, and certifications must be included in the permanent site file.

9.0 CORRECTIVE ACTION

In the unlikely situation that natural or unforeseen events threaten the stability of the disposal cell, corrective action that could include temporary emergency measures would be carried out to remediate the problem. In addition, the DOE would evaluate the factors that caused the problem and ensure that recurrence is minimized or avoided.

Once a potential problem has been identified, the DOE will notify the NRC and the state of Wyoming and submit an inspection/preliminary assessment report to the NRC for review within 60 days of problem identification. After the NRC has reviewed the report and recommendations, the DOE will develop a corrective action plan and submit it to the NRC for approval. The DOE may also choose to combine the inspection and recommendation in one report, depending on the severity of the problem. Once the NRC has approved the corrective action, the plan will be implemented by the DOE. Figure 9.1 illustrates the general sequence of events in the corrective action process and Figure 9.2 identifies the key elements in the corrective action process.

9.1 PROBLEM IDENTIFICATION

Site inspections and custodial maintenance are designed to identify potential problems at the developmental stage, thus eliminating the need for corrective action. However, it is recognized that extreme natural events may occur, that vandalism may affect the surface, or that unanticipated events may occur. Some examples of situations that may require corrective action are provided below as guidelines:

- Unforeseen subsidence of the surface; in particular, deep cracking along the pit sidewalls.
- Rapid headward cutting of nearby gullies.

9.2 IMPLEMENTATION OF CORRECTIVE ACTION

Detailed procedures for implementing a corrective action will be developed by the DOE at the time of such an occurrence. It is possible that a corrective action could be carried out in two or more steps. The first step could consist of one or more site inspections for data collection to identify the cause and magnitude of the problem and to assess the engineering design to determine whether or not the problem was in any way related to aspects of the design. The results of these evaluations may determine that additional data must be collected over several seasons, a phased approach to resolve the problem is necessary, or that the problem needs to be monitored before an approach is selected.

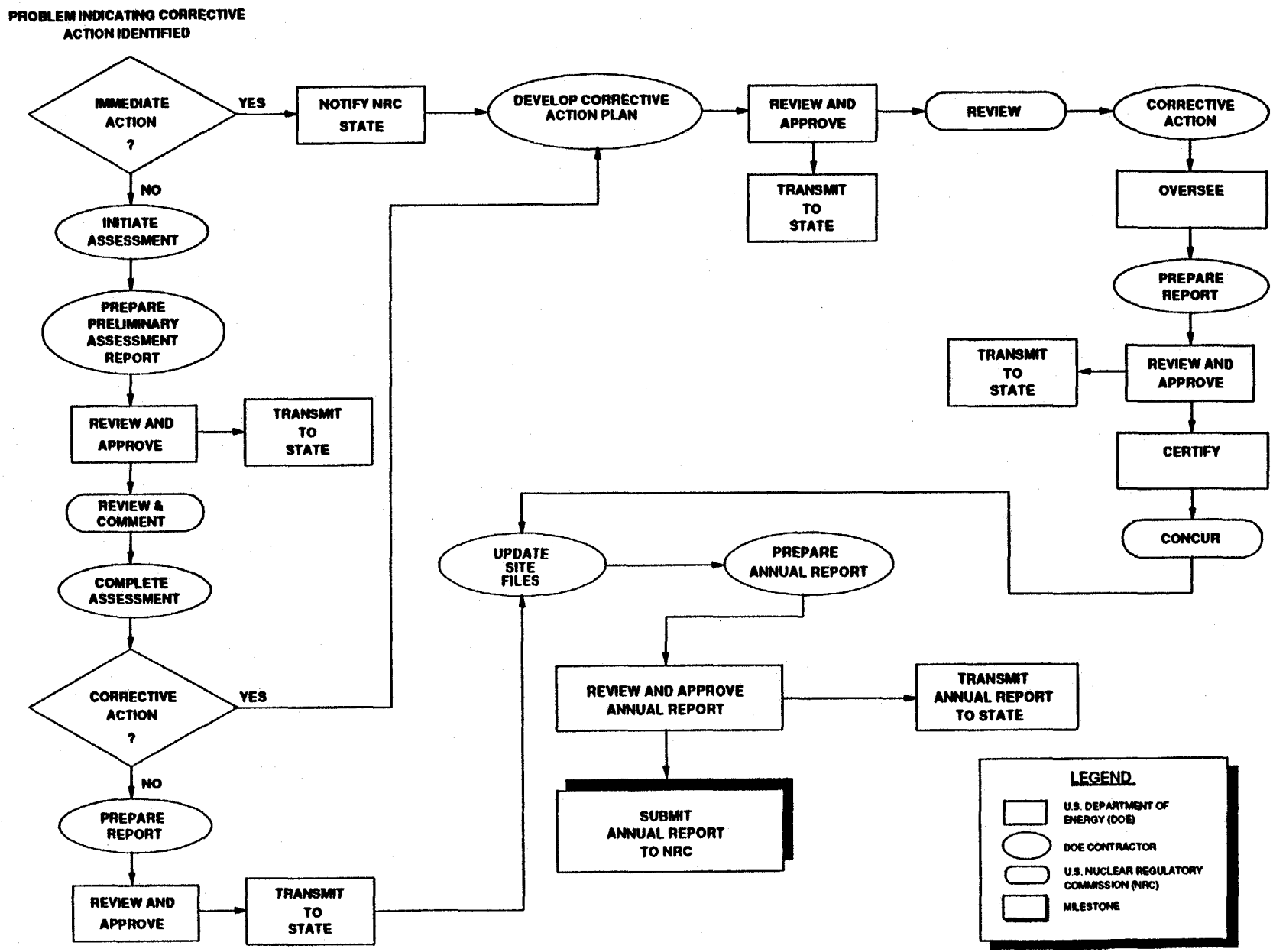

FIGURE 9.1
CORRECTIVE ACTION
UMTRA PROJECT LONG-TERM SURVEILLANCE PROGRAM

PATH1\FL3.01\SPK

FIG10COR.DRW

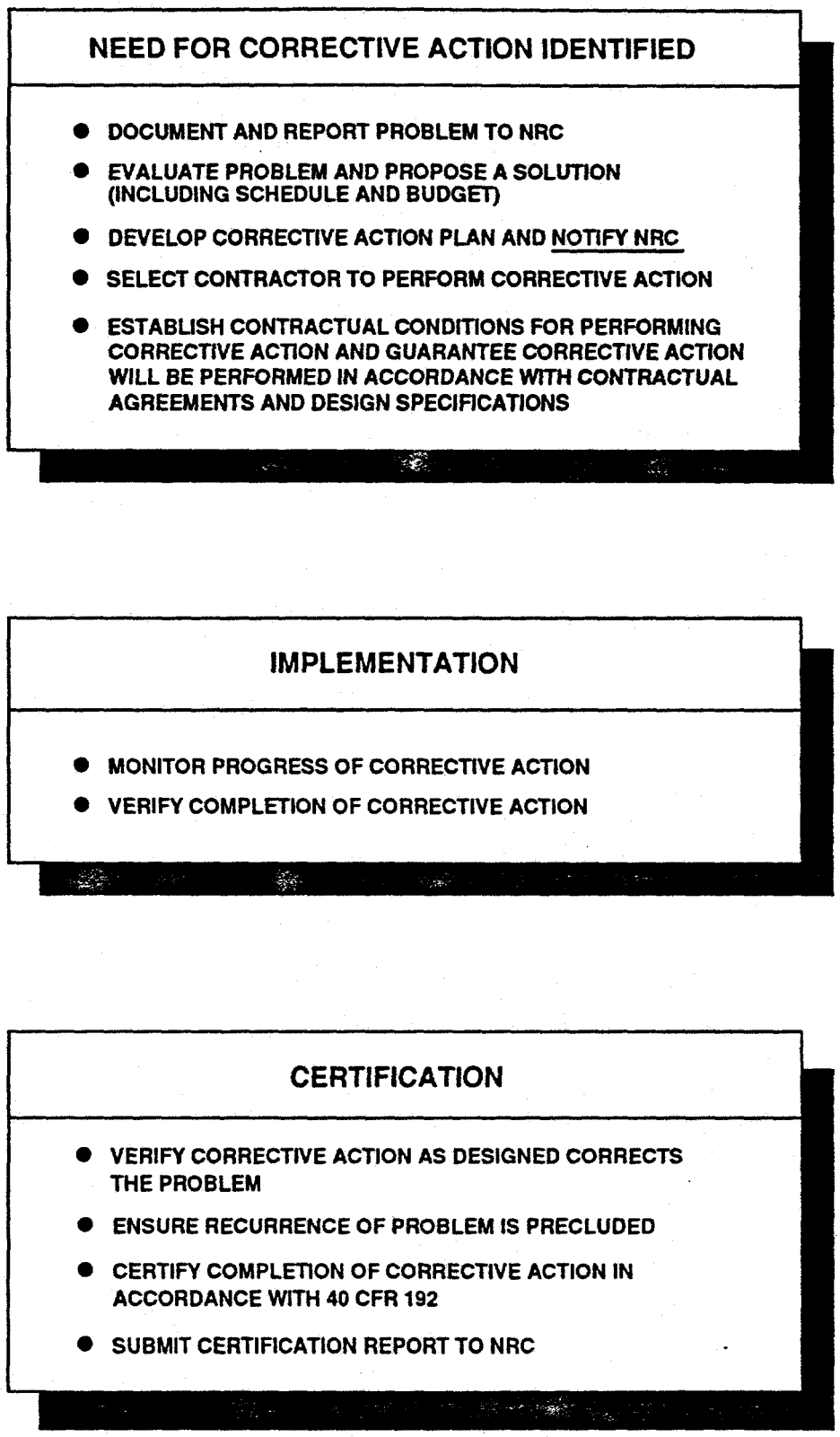

FIGURE 9.2
KEY ELEMENTS IN THE CORRECTIVE ACTION PROCESS

9.3 REPORTING PROCEDURES

While a corrective action is being performed or evaluated, the DOE will prepare progress reports on the corrective action. The NRC will be given a copy of each report or the report should be attached to the annual report. In any event, the NRC will be apprised of the problem and the solution that is being evaluated. Each report will be provided to the state of Wyoming within 60 days of completion of the corrective action.

After completion of the corrective action, the DOE will certify that the work has been completed in accordance with design recommendations and in accordance with all applicable Federal or state regulations. The NRC will review the DOE certification and concur that the corrective action is acceptable. A copy of the DOE certification statement and NRC concurrence will be placed in the permanent site file along with all reports, data, and documentation generated during the corrective action.

10.0 RECORD KEEPING AND REPORTING REQUIREMENTS

A permanent site file maintained by the DOE will contain all the information necessary to prepare for and conduct site surveillance. Carefully compiled, complete, accurate reports of site surveillance activities will be maintained in accordance with archival procedures set forth in CFR, Title 41, Public Contractors and Property Management; Chapter 101, Federal Property Management Regulations; Subchapter B, Archives and Records; Section 101.11, Records Management (41 CFR 101.11). Reports and records will ensure the following:

- The DOE and the NRC are provided with the information necessary to forecast future site surveillance needs.
- Information that demonstrates that the integrity of the site is being maintained is available to the public.
- The NRC is convinced that licensing provisions are being met.

All site inspection documentation and records will be maintained in the permanent site files for a minimum of 5 years. The site inspection reports will be maintained in the permanent site files for a minimum of 10 years. At the end of the specified retention period, all records, reports, and other documentation will be microfiched (or its equivalent) and stored in the DOE archives.

10.1 RECORDS

The permanent Spook site file will contain all the information necessary for carrying out the LTSP, including documentation of the disposal site history and construction. The files will be maintained by the GJPO in Grand Junction, Colorado. The original deeds, custody agreements, and other property documents will be kept in the DOE Facilities and Property Management Division, Albuquerque, New Mexico. Copies of these documents also will be maintained in the GJPO files.

All site inspection documentation and records will be maintained in the permanent site files for a minimum of 5 years. The site inspection reports will be maintained in the permanent site files for a minimum of 10 years. At the end of the specified retention period, all records, reports, and other documentation will be copied on microfiche (or its equivalent) and stored in the DOE archives.

All information will be available for review by the NRC and the public. The Spook permanent site file will include the following:

- Licensing documentation.
- The LTSP.
- Disposal site legal description, title, custody documentation, or cooperative agreements.

- Notification requests with the USGS, National Weather Service, and Converse County Sheriff's Department.
- Documentation of rights of entry.
- The Spook EA and Finding of No Significant Impact.
- Disposal site characterization report.
- Final RAP and final design for construction.
- Pertinent design and construction documents and drawings.
- Site certification report (certification summary, completion and final audit reports).
- As-built drawings.
- Site atlas (vicinity, topographic, and base maps).
- Baseline and aerial photographs.
- Groundwater monitoring reports and records.
- Monitor well permits and well abandonment records.
- Annual reports to the NRC.
- Annual inspection reports and records.
- Follow-up or contingency inspection preliminary assessments, reports, and records.
- Custodial maintenance or repair reports and records.
- Corrective action plans, reports, and records.
- GJPO QA program plan.

The permanent Spook site file will be updated, as necessary, after completing the annual disposal site inspections.

10.2 REPORTS

The GJPO will provide an annual report to the NRC documenting the results of the annual site inspections and any other activities conducted in conjunction with the LTSP. Criterion 12 to Appendix A of 10 CFR 40 requires that the report be submitted within 90 days after the date of the last site inspection for that calendar year.

The GJPO also will submit reports to NRC documenting follow-up or contingency inspections and any corrective action plans. If any unusual damage or disruption is discovered, Criterion 12 requires that all preliminary inspection reports be submitted within 60 days of the discovery.

11.0 EMERGENCY NOTIFICATION AND REPORTING

The Spook disposal cell was designed to comply with 40 CFR 192 with minimum maintenance and oversight for a period of 1000 years. However, due to unforeseen events, problems could develop that affect the disposal cell's ability to remain in compliance with 40 CFR 192. Because of this possibility, the DOE has requested notification by appropriate agencies of any unusual occurrences or damages reported at the Spook disposal site.

In case of unusual occurrences or damages, the DOE has requested notification from the Converse County Sheriff's Department (Douglas, Wyoming), the USGS National Earthquake Information Center (Denver, Colorado), and the Wyoming State Office of the National Weather Service, Casper, Wyoming. Copies of the requests are presented in Attachment 5. The designated point of contact for emergency notification is the GJPO's 24-hour phone line (303-248-6070).

The agreements shall be carried out in accordance with the requirements of DOE Order 5000.3B, *Occurrence Reporting and Processing of Operative Information*. The Spook site facility manager or a designated representative will be the designated DOE contact, in accordance with this Order. The UMTRA Project Office will be the designated facility contact until the Spook site is licensed. After licensing, the designated facility contact will be the GJPO.

Updating the contact lists and telephone numbers for all agencies and parties with whom the DOE has entered into agreements will be done annually, in conjunction with the site inspection, for inclusion in the disposal site inspection report.

11.1 AGENCY AGREEMENTS

The Converse County Sheriff's Department will notify the GJPO should any unusual occurrences be observed by any of their staff or reported to their office.

11.2 EARTHQUAKES

The DOE subscribes to the USGS Early Warning Service for notification when an earthquake of sufficient magnitude threatens a disposal site. This service provides data on the magnitude of the event and the location of the epicenter.

The USGS National Earthquake Information Center will notify the GJPO if a seismic event(s) occurs that fits any of the following descriptions:

- Any earthquake of magnitude 3.0 or greater, within 0.3 degrees [about 20 miles (32-km)] of the site.
- Any earthquake of magnitude 5.0 or greater, within 1.0 degrees [about 70 miles (112-km)] of the site.

11.3 METEOROLOGICAL EVENTS

The DOE has requested the Wyoming State Office of the National Weather Service in Casper, Wyoming to notify the GJPO within 8 hours of issuance of a flash flood or tornado warning in Converse County, Wyoming.

12.0 QUALITY ASSURANCE

Development of QA procedures specific to the UMTRA Long-term Surveillance Program is the responsibility of the GJPO. The GJPO Quality Assurance Program Plan will specify requirements for the following:

- Program planning.
- Program activities, including inspections, site maintenance, corrective actions, and emergency responses.
- Any monitoring that may be required.
- Qualifications and training of personnel.
- Surveillance and audits of program.
- Analytical QA.
- Analytical data validation.

All site inspections, monitoring data, records, photographs, maps, and other information related to the LTSP for the Spook disposal site are subject to formal and unannounced audits conducted by the DOE or the NRC. Specific QA criteria have already been developed for aerial photographs (DOE, 1992).

13.0 PERSONNEL HEALTH AND SAFETY

DOE Order 5480.1B, Environment, Safety, and Health Program for DOE Programs, establishes personnel health and safety procedures for all DOE operations. After a disposal site is licensed and transferred to the GJPO, health and safety procedures for GJPO personnel and GJPO subcontractors will be the responsibility of GJPO. The GJPO will determine health and safety requirements for its personnel in accordance with applicable orders and Federal regulations. Because the disposal cells were constructed to control radium-226 and radon-222 releases from the residual radioactive material to within regulatory standards [40 CFR 192.02(a)]. Radiation exposure tracking and dosimetry badges are not needed.

13.1 HEALTH AND SAFETY

Specific safety concerns at the Spook disposal site include animal, snake, and insect bites; heat and cold stress; fire hazards; puncture and cut hazards; and driving hazards.

13.1.1 Emergency medical and law enforcement

Local emergency medical and law enforcement agencies have been briefed on the scope of work at the Spook disposal site during the long-term surveillance and maintenance phase. The pertinent 24-hour emergency numbers are as follows:

- Fire: 911
- Ambulance: 911 or (307) 358-2122
- Police/Sheriff: 911 or (307) 358-4700

The nearest hospital with an emergency room is located in Douglas, Wyoming, 45 mi (72 km) south of the disposal site. The Converse County hospital is located at Oak and 5th Street, Douglas, Wyoming. Directions to the hospital from the site are as follows:

- Take the gravel road from the disposal site southwest for 8.5 mi (13.6 km) to Ross Road (County Rd 31).
- Take Ross Road (County Rd 31) south for 15.3 mi (24.5 km).
- Turn on to State Highway 93 south, and drive 21 mi (33.6 km) to Douglas.
- The hospital is located at Oak and 5th Street in Douglas.

The nearest phone is located approximately 6 mi (10 km) from the site at the Hornbuckle Ranch.

13.2 REPORTABLE INCIDENTS

The inspection team should be briefed by the GJPO health and safety officer on potential site hazards and other requirements prior to the site inspection or any site visit.

In accordance with DOE Order 5000.3B, any accident, injury, or environmental event (i.e., tornado, flood, and the like) occurring during the site inspection is a reportable incident. The condition or event will be reported to the GJPO Facility Manager or designated contact within 2 hours of the accident. The GJPO Facility Manager's 24-hour telephone number for reporting an incident is (303) 248-6070.

14.0 REFERENCES

ASP (American Society of Photogrammetry), 1980. Manual of Photogrammetry, 4th Edition, published by the American Society of Photogrammetry, Falls Church, Virginia.

DOE (U.S. Department of Energy), 1992. "Guidance for Implementing the UMTRA Project Long-term Surveillance Program," UMTRA-DOE/AL-350125.0000, Revision 1, Final DOE UMTRA Project Office, Albuquerque Operations Office, Albuquerque, New Mexico.

DOE (U.S. Department of Energy), 1990. Remedial Action Plan and Site Design for Stabilization of the Inactive Uranium Mill Tailings at the Spook Site, Converse County, Wyoming, UMTRA-DOE/AL-050515.0000, DOE UMTRA Project Office, Albuquerque Operations Office, Albuquerque, New Mexico.

DOE (U.S. Department of Energy), 1989. Environmental Assessment of Remedial Action at the Spook Uranium Mill Tailings Site, Spook, Wyoming, DOE/EA-0345, DOE UMTRA Project Office, Albuquerque Operations Office, Albuquerque, New Mexico.

MKF (MK-Ferguson), 1991. Spook, Wyoming, Final Completion Report, prepared by MKF for the U.S. Department of Energy UMTRA Project Office, Contract No. DE-AC04-83AL18796, Albuquerque Operations Office, Albuquerque, New Mexico.

MKF (MK-Ferguson), 1989. "UMTRA Project, Spook, Wyoming, Surveillance and Maintenance Subcontract Documents," prepared by MKF for the U.S. Department of Energy, UMTRA Project Office, Albuquerque Operations Office, Albuquerque, New Mexico.

NRC (U.S. Nuclear Regulatory Commission), 1989. "Final Technical Evaluation Report for the Proposed Remedial Action at the Spook Tailings Site, Spook, Wyoming," prepared by the Division of Low-Level Waste Management and Decommissioning, U.S. Nuclear Regulatory Commission, Washington D.C.

ATTACHMENT 1

NRC CONCURRENCE LETTER

UNITED STATES
NUCLEAR REGULATORY COMMISSION
WASHINGTON, D. C. 20555

MAR 04 1992

Mr. Albert R. Chernoff, Project Manager
Uranium Mill Tailings Remedial Action
Project Office
U.S. Department of Energy
Albuquerque Operations Office
P.O. Box 5400
Albuquerque, New Mexico 87115

Dear Mr. Chernoff:

The U.S. Nuclear Regulatory Commission (NRC) staff has completed its review of the Certification Report and all associated documentation pertinent to the completed remedial action at the inactive Spook uranium mill tailings site in Converse County, Wyoming. Our review is documented in the enclosed Completion Review Report which discusses the staff's evaluation of the completed remedial action against the previously approved plans and specifications.

Based on its review of the Certification Report and on observations during periodic site inspections, the NRC staff concurs that the Department of Energy (DOE) has performed remedial action at the Spook site in accordance with the approved plans and specifications and that this action complies with the Environmental Protection Agency's standards in 40 CFR Part 192, Subparts A-C. With the exception of selection and performance of a groundwater cleanup program, remedial actions are complete for the Spook site. DOE has proposed deferral of this aspect of the remedial action at this time, and plans to handle this as part of a separate groundwater restoration program. The NRC staff, therefore, has signed the enclosed signature pages signifying its concurrence in completion of the Spook remedial action (other than groundwater restoration).

If you have any questions regarding this review, please contact me at FTS 964-3439 or the NRC Project Manager, Allan Mullins, at FTS 964-2578.

Sincerely,

John J. Surmeier, Chief
Uranium Recovery Branch
Division of Low-Level Waste Management
and Decommissioning, NMSS

Enclosures: As stated

cc: D. Mathes, DOE HQ
P. Mann, DOE/Alb
K. Feldman, EPA
J. Erikson, WY DEQ

U.S. DEPARTMENT OF ENERGY
CERTIFICATION SUMMARY
for the
Spook, Wyoming, Disposal Site

The Uranium Mill Tailings Remedial Action Project Manager and the Contracting Officer for the U.S. Department of Energy certify the Spook, Wyoming, combined processing and disposal site is complete and meets all design criteria, technical specifications, and the surface Remedial Action Plan required under Public Law 95-604. The undersigned request that the U.S. Nuclear Regulatory Commission concur in this certification.

Betsy A. Shaw
Chief, Program and R & D Branch
Contracts and Procurement Division
Contracting Officer

DATE: 1-15-92

Albert R. Chernoff
Project Manager
Uranium Mill Tailings Remedial
Action Project Office

DATE: 1/13/92

The Chief, Uranium Recovery Branch, Division of Low-Level Waste Management and Decommissioning, U.S. Nuclear Regulatory Commission hereby concurs with the U.S. Department of Energy's completion of surface remedial action at the Spook, Wyoming, combined processing and disposal site.

Mr. John J. Surmeier
Chief, Uranium Recovery Branch
Division of Low-Level Waste
Management and Decommissioning
U.S. Nuclear Regulatory Commission

DATE: 3/4/92

UNITED STATES
NUCLEAR REGULATORY COMMISSION
WASHINGTON, D. C. 20555

DEC - 1 1992

Mark Matthews, Acting Project Manager
Uranium Mill Tailings Project Office
U.S. Department of Energy
Albuquerque Operations Office
P. O. Box 5400
Albuquerque, New Mexico 87115

Dear Mr. Matthews:

The U.S. Nuclear Regulatory Commission (NRC) staff has completed its review of the Remedial Action Plan and Site Conceptual Design (RAP) and all associated documentation pertinent to the proposed remedial action for the Spook, Wyoming uranium mill tailings site, including RAP changes associated with Project Interface Documents (PIDs) No. 15-S-02 and No. 15-S-03. Our review is documented in the enclosed Technical Evaluation Report (TER), which discusses the NRC staff's evaluation of the proposed remedial action for compliance with the EPA standards.

Based on our review, we hereby conditionally concur in DOE's selection of remedial action. The condition results from the open issue identified in our TER, which is DOE's deferral of ground-water cleanup until the next task of the UMTRA Project. While the NRC staff considers DOE's deferral to be acceptable, it precludes us from being able to fully concur in the proposed remedial action. Therefore, our concurrence will remain conditional until the staff determines that DOE has adequately addressed this issue. We will execute the conditional concurrence upon receipt of the appropriate DOE-signed signature pages.

If you have any questions regarding information in the enclosed TER, please contact me or Dan Gillen of my staff (FTS 492-0517).

Sincerely,

Paul H. Lohaus

Paul H. Lohaus, Chief
Operations Branch
Division of Low-Level Waste Management
and Decommissioning, NMSS

Enclosure: Technical Evaluation Report

cc: S.Mann, DOE Hq.
M.Abrams, DOE Alb.
C.Watson, DOE Alb.

UNITED STATES
NUCLEAR REGULATORY COMMISSION
WASHINGTON, D. C. 20555

MAR 15 1990

Mr. Mark Matthews, Acting Project Manager
Uranium Mill Tailings Project Office
Albuquerque Operations Office
U. S. Department of Energy
P. O. Box 5400
Albuquerque, NM 87115

Dear Mr. Matthews:

I have received the three original signature pages for the Spook, Wyoming Remedial Action Plan (RAP) transmitted by your letter of March 12, 1990. Enclosed are the signature pages that I have signed, executing the NRC staff's conditional concurrence in DOE's selection of remedial action for this UMTRA Project site.

The signature pages have been annotated to indicate that the concurrence is conditional by reference to my letter to you dated December 4, 1989. The basis for the staff's conditional concurrence has been documented in the NRC Technical Evaluation Report transmitted to you by that letter. Note that the only condition precluding full concurrence is that the plan for groundwater clean-up in accordance with EPA standards remains to be addressed. DOE has elected, with NRC's approval, to defer this issue until the next task of the UMTRA Project.

Should you have any questions regarding this transmittal, please contact me or Dan Gillen of my staff (FTS 492-0517).

Sincerely,

Paul H. Lohaus

Paul H. Lohaus, Chief
Operations Branch
Division of Low-Level Waste Management
and Decommissioning, NMSS

Enclosure: As stated

cc: Sally Mann, DOE Hq.
P. Mann, DOE Alb.
M. Abrams, DOE Alb.

U.S. Department of Energy
Agreement No. DE-FC04-83AL19454
Appendix B, Remedial Action Plan
for Spook, Wyoming

The United States of America
Department of Energy

By: Mark L Matthews

Mark L. Matthews
Acting Project Manager
Uranium Mill Tailings Project Office
Albuquerque Operations Office
U.S. Department of Energy
P.O. Box 5400
Albuquerque, NM 87115

Date: 12-13-89

State of Wyoming

By:

Mike Sullivan
Governor, State of Wyoming
State Capitol Building
Cheyenne, WY

Date: 2/17/90

CONCURRENCE:
NUCLEAR REGULATORY COMMISSION

By: Paul H. Lohaus

Paul H. Lohaus, Branch Chief
Operations Branch
Division of Low-Level Waste Management
and Decommissioning

Date: 3/15/90

(See TER transmittal letter dated December 4, 1989,
for conditions of concurrence)

ATTACHMENT 2

LAND OWNERSHIP DOCUMENTATION

LAND OWNERSHIP DOCUMENTATION

GENERAL

Real estate acquisition associated with the long-term surveillance program for the Spook disposal site consists of surface, subsurface, and an individual mining claim acquisition. Surface acquisition totals 13.52 acres (5.5 hectares) of private land that was purchased from the Hornbuckle Ranch. Subsurface acquisition totals 80 acres (32 hectares) of land acquired by a permanent transfer of land jurisdiction from the Bureau of Land Management. A portion of a private 20-acre (8-hectare) unpatented mining claim was acquired from Quivira Mining Company as part of the buffer zone to maintain the integrity of the disposal cell.

DOCUMENTATION OF ACQUISITION

A. Surface acquisition

(1) Legal description

A parcel of land located in the SE 1/4 NE 1/4, Section 28, Township 38 North (T38N), Range 73 West (R73W), 6th Principal Meridian (P.M.), Converse County, Wyoming, more particularly described as follows:

Commencing at the northeast corner of Section 28, said point being a 1 1/2" aluminum cap, PELS 519 inscribed and from which the east 1/4 corner of said Section 28 bears S.00°20'29"E., said east 1/4 corner being a 2" pipe in concrete, 1/4 inscribed; thence, S.03°44'22"W., 1,533.26 feet to the Point of Beginning of this description; thence S.12°41'16"E., 185.53 feet; thence S.06°24'37"W., 435.75 feet; thence S.47°10'12"W., 352.96 feet; thence S.65°08'47"W., 498.36 feet; thence N.62°25'24"W., 103.34 feet; thence N.01°40'46"W., 247.37 feet; thence N.22°47'08"E., 452.67 feet; thence N.41°02'04"E., 465.32 feet; thence east 337.00 feet to the point of beginning of this description, said parcel containing 13.52 acres, more or less, and subject to all easements, rights-of-way, and restrictions of record. All boundary corners of the above-described parcel of land were monumented with 1 1/2" aluminum cap on 5/8" x 18" rebar.

(2) Recorded

Book: 965, Page: 124, County: Converse, State: Wyoming, Filing date: October 6, 1989

B. Subsurface acquisition

(1) Legal description

W 1/2 W 1/2 SW 1/4 NW 1/4, Section 27, T38N, R73W, 6th P.M.

SE 1/4 NE 1/4, N 1/2 NE 1/4 SE 1/4, SE 1/4 NE 1/4 SE 1/4, Section 28, T38N, R73W, 6th P.M.

(2) Recorded

Federal Register, 25 October 1990

C. Mining claim

(1) Legal description

A portion of Mining Claim ZEE 1, situated in the W 1/2 W 1/2 NW 1/4 of Section 27, T38N, R73W of the Sixth Principal Meridian, Converse County, Wyoming, being more particularly described as follows:

Commencing at the Northwest corner of said Section 27; thence South along the West line of said Section 27, a distance of 1320.00 feet; thence East, 10.00 feet to the POINT OF BEGINNING; thence continuing East, 310.00 feet; thence South parallel with said West line, 1320.00 feet; thence West, 310.00 feet; thence North parallel with said West line, 1320.00 feet to the point of beginning.

The tract of land herein described contains 9.39 acres, more or less.

NOTE: The West line is assumed to bear due South for the purposes of this description.

(2) Recorded

Book: 1036, Page: 571, County: Converse, State: Wyoming,
Filing Date: 20 May 1993

Real estate correspondence and related documents are maintained and filed by the Department of Energy, Albuquerque Operations Office, Property Management Branch, Facilities and Property Management Division, Albuquerque, New Mexico, under the supervision of Corville J. Nohava, (505) 845-6450.

ATTACHMENT 3

SITE INSPECTION PHOTO LOG

SITE INSPECTION PHOTO LOG

Site: _____ Site Activity: _____

Date: _____ Time of Day: From _____ to _____

Weather Conditions: _____

Roll Number: _____ Film Type: _____ Number of Exposures: _____

Photo Number	Location	Description

Photo Number	Location	Description

Photographer: _____ _____
Printed Name Signature

SITE INSPECTION PHOTO LOG (CONT.)

Site _____
Date _____

Photo Number	Location	Description

Photo Number	Location	Description

ATTACHMENT 4

SITE INSPECTION CHECKLIST

SITE INSPECTION CHECKLIST FOR THE

SPOOK SITE

Reason for Inspection: _____

Responsible Agency: _____

Address: _____

Responsible Agency Official: _____

Inspection Start Date and Time: _____

Inspection Completion Date and Time: _____

Weather Conditions at Site: _____

Chief Inspector: _____
Name Title Organization

Assistant Inspector(s): _____
Name Title Organization

_____
Name Title Organization

A. GENERAL INSTRUCTIONS

1. The following site inspection procedures are to be used by site inspectors to prepare for and carry out the site inspection. The intention of these procedures is to provide a consistent, comprehensive approach to site inspections.

2. All anomalous features or new features (such as changes in adjacent area land use) are to be photographed. A photo log entry must be made for each photograph taken (see Attachment 2).

3. Inspectors are to provide an up-to-date resume for inclusion in the inspection report.

B. PREPARATION

		Yes	No
1.	License reviewed (includes site long-term surveillance plan)?	____	____
2.	As-built site plans reviewed and base map with copies of following site map overlays obtained:	____	____
	a. Ground photo locations?	____	____
	b. Planned inspection transects?	____	____
	c. Others? _____		

These maps and overlays will be used to identify site features and record, as appropriate, field data.

3.	Previous inspection reports reviewed?	____	____
	a. Were anomalies or trends in modifying processes detected on previous inspections?	____	____
	b. Were follow-up or contingency inspections conducted?	____	____
	c. Was custodial maintenance performed?	____	____
	d. Was repair work or corrective action done as a result of previous inspections?	____	____
4.	Has any site repair or corrective action been reported since the last inspection?	____	____
	a. Has repair or corrective action resulted in a change from as-built conditions?	____	____
	b. Are revised as-built plans available that reflect any changes?	____	____
5.	Property entry notices given or permission obtained?	____	____
	Person/agency contacted: _____		
6.	Aerial photos, if taken since last inspection, reviewed? For each set, enter date taken, scale, and if interpreted.	____	____

Set	Date	Scale	Interpeted Yes	Interpeted No
1.	_____	_____	____	____

2. _____ _____ ____ ____

3. _____ _____ ____ ____

Were any of the following indicated by examination of these aerial photographs (if yes, give photo set number):

		Yes	No
a.	Intrusion by people or animals?	____	____
b.	Change in surrounding area drainage?	____	____
c.	Change in course of the Dry Fork of the Cheyenne River?	____	____
d.	Obstruction of drainage features?	____	____
e.	Disturbance of fences, site markers, or monuments?	____	____
f.	Change in adjacent land use?	____	____

7. From as-built plans, or subsequent inspection reports, note distance and azimuth from designated site location, such as a monument, to adjacent off-site features that could eventually affect integrity of site.

	Off-site feature	Site monument #	Distance	Azimuth
1.	_____	_____	_____	_____
2.	_____	_____	_____	_____
3.	_____	_____	_____	_____

8. Assemble and check out the following equipment as needed to conduct inspections:

a. Cameras, film, and miscellaneous support photo equipment.
b. Binoculars.
c. Tape measure.
d. Flagging material.
e. Brunton compass.
f. First-aid kit, drinking water bottles.
g. Clipboard, notebook, note paper, pens, pencils, markers.
h. Checklist, maps.
i. Keys to locks.
j. Bolt cutters.
k. Others. _____

C. SITE INSPECTION

	Yes	No
1. Adjacent off-site features within 0.25 mile of site boundary:		
a. Have there been any changes in use of adjacent areas (grazing, construction, agriculture)?	____	____
b. Are there any new roads or trails?	____	____
c. Has there been headward erosion of nearby gullies or washes?	____	____
d. Is access road passable?	____	____
e. Are there active modifying processes that could impact the site?	____	____
f. Others? _____		
2. Disposal site access roads, fences, gates, and signs:		
a. Is there a break in the fence?	____	____
b. Have any fence posts been damaged or their anchoring weakened?	____	____
c. Is there evidence of erosion or digging beneath the fence?	____	____
d. Does the gate show evidence of tampering or damage?	____	____
e. Is there any evidence of human or large animal intrusion?	____	____
f. Have any signs been damaged or removed? (Number of signs to be replaced: ____)	____	____
g. Are access roads passable?	____	____
h. Others? _____		
3. Monuments and site markers:		
a. Have the survey or boundary monuments been disturbed by people or natural processes?	____	____
b. Have the site markers been disturbed by people or natural processes?	____	____
c. Is the integrity of any monument or site marker threatened?	____	____
d. Others? _____		

		Yes	No
4.	Surface area:		
	a. Is there evidence of uneven settling (depressions, bulges, scarps)?	____	____
	b. Is there evidence of erosion?	____	____
	c. Has runoff become channelized (rivulets, gullies)?	____	____
	d. Is there evidence of animal burrowing?	____	____
	e. Is the vigor of the vegetation significantly less than in the surrounding area?	____	____
	f. Others? _____		
5.	Photography:		
	a. Have all photos required by the site map photo overlay been taken?	____	____
	b. Has a photo log sheet been prepared for each roll of film exposed?	____	____
	c. Number of rolls of film exposed: _____		
	d. Others? _____		

D. FIELD CONCLUSIONS

1.	Is there an imminent hazard to the integrity of the buried tailings pile (if yes, immediate unusual occurrence report required)?	____	____
	Person notified: _____		
	Agency to whom report made: _____		
2.	Are more frequent site inspections required?	____	____
3.	Is a follow-up inspection required?	____	____
4.	Is custodial maintenance, repair, or corrective action required?	____	____
5.	Rationale for field conclusions: _____		

_____

_____

_____

E. CERTIFICATION

I have conducted a site inspection of the Spook uranium mill tailings disposal site in accordance with the procedures of the license (includes the site long-term surveillance plan) as recorded on this checklist, attached sheets, field notes, site map, photos, and photo log sheets.

Chief Inspector's Signature	Printed Name
Title	Date

ATTACHMENT 5

AGENCY NOTIFICATION AGREEMENTS

Department of Energy
Albuquerque Operations Office
P.O. Box 5400
Albuquerque New Mexico 87115

JUN 29 1992

Mr. Bruce Presgrave
National Earthquake Information Center
Mail Stop 967
Box 25046
Denver, CO 80225

Dear Mr. Presgrave:

The Department of Energy (DOE) is requesting notification if the event of a seismic event in Converse County, Wyoming. The purpose of this request is to assist us in surveying and maintaining the integrity of the DOE Uranium Mill Tailings Remedial Action Project radioactive waste disposal site located 48 miles northeast of Casper, Wyoming, in Converse County, Wyoming.

We are requesting notification to the DOE Grand Junction Projects Office's 24-hour phone at (303) 248-6070 if a seismic event(s) occurs of the following description:

Any earthquake centered within a 9 mile radius of the site (see enclosure for site location).

Any earthquake of magnitude 4.0 or greater, centered between a 9 mile radius and a 19 mile radius.

Any earthquake of magnitude 6.2 or greater centered between a 19 mile radius and a 40 mile radius.

Should you have any questions, please contact Frank Bosiljevac at (505) 845-5638. Thank you for your attention to this matter.

Sincerely,

Frank Bosiljevac
Technical Support Group Leader
Uranium Mill Tailings Remedial Action
Project Office

Enclosure

cc w/o enclosure:
J. Virgona, GJPO
C. Jones, GJPO

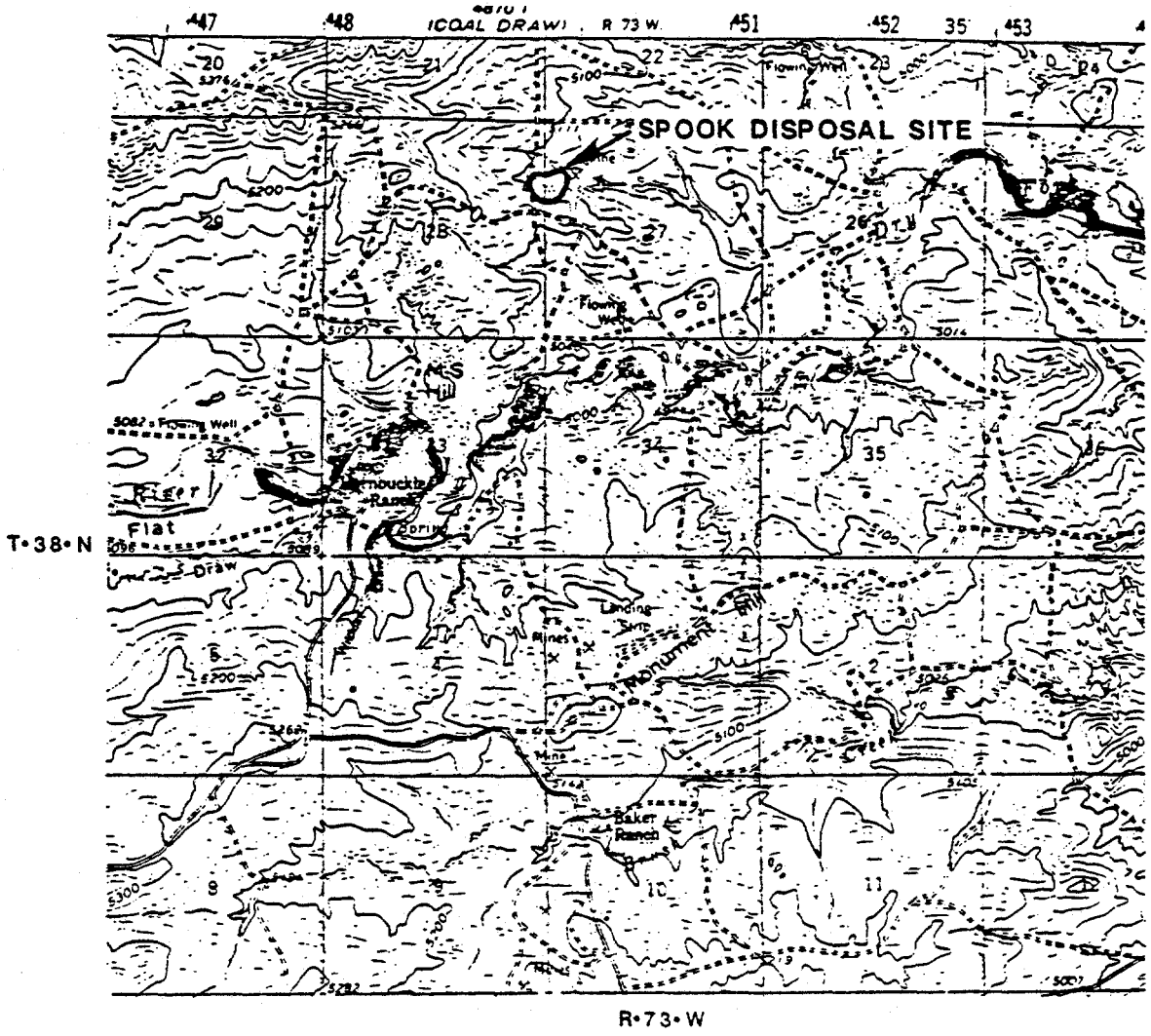

LOCATION OF SPOOK DISPOSAL SITE IN CONVERSE COUNTY, WYOMING

MIS/UMT/1292-0075

National Earthquake Information Center

World Data Center A for Seismology

~~Director~~
~~(303) 236-1540~~
~~Research~~
~~(303) 236-1500~~

U.S. Geological Survey
Box 25046, DFC, MS-967
Denver, Colorado 80225 USA
Telex: (WUTCO) 5106014123ESL UD
FAX: (303) ~~236-1519~~ 273-8450

Operations
(303) ~~236-1500~~ 273-8500
QED
(800) 358-2663

December 14, 1992

Albert R. Chernoff
UMTRA Project Manager
U.S. Department of Energy
Uranium Mill Tailings Remedial Action
Project Office
5301 Central Ave. NE, Suite 1720
Albuquerque, NM 87108

Dear Mr. Chernoff:

This letter is to confirm that the DOE Grand Junction Projects Office has been added to our notification list for earthquakes near the following sites:

Green River, UT	39.0 N	110.0 W
"Spook" site, WY	43.2 N	105.6 W
Tuba City, AZ	36.1 N	111.1 W
Shiprock, NM	36.8 N	108.7 W

We have entered the following selection criteria into our notification program:

1. Any earthquake of magnitude 3.0 or greater, within 0.3 degrees (about 20 miles) of any site shown above, or

2. Any earthquake of magnitude 5.0 or greater, within 1.0 degrees (about 70 miles) of any site shown above.

Note that these criteria are slightly different than the ones you requested, but we believe that they will still meet your needs. It was not possible to include your first criterion (any earthquake centered within a 9-mile radius of a site) for two reasons. First, this office does not work events that have magnitudes less than 2.5 on the Richter scale, unless someone has reported that the earthquake was felt. Since the Richter scale is logarithmic, earthquakes of magnitude 0 or even negative (-1.3, -2.3, etc) are possible, but with the station distribution we have it would not be possible for us to locate them. Second, the 9-mile radius, or about 0.1 degrees, is smaller than the location error which may occur for the preliminary locations we will be reporting to you. In fact, our preliminary locations which will be reported to the Grand Junction Projects Office will be reported only to the nearest tenth of a degree of latitude and longitude.

For the sites shown above, we believe that we can locate earthquakes reliably that are above a threshold of magnitude 3.0. We also suggest that if any of your personnel at any of these sites feel an earthquake, they should call our office at (303) 273-8500 and our duty geophysicists will check the event for them. Note that after normal duty hours, there is a recording on this number giving the home phone numbers of the two geophysicists on duty.

We have reduced the magnitude threshold for the last criterion from 6.2 to 5.0 and have increased the maximum radius from 40 miles to 70 miles because large earthquakes are not point sources, but can have rupture lengths of significant size. For example, the Landers, California earthquake on June 28 (magnitude 7.6) had a rupture length of more than 40 miles and the Great Alaska earthquake of 1964 (magnitude 9.2) had a rupture length of about 400 miles. The location we compute for an earthquake is the hypocenter - the place where the earthquake starts. Usually an earthquake will rupture farther in one direction than others from the hypocenter. This means that a magnitude 8 earthquake with a hypocenter 60 miles away from one of your sites may in fact have ruptured directly through the site, depending on the orientation of the fault.

If you have any questions about these criteria, please give us a call.

Sincerely,

Bruce W. Presgrave

Bruce W. Presgrave
Geophysicist

Department of Energy
Albuquerque Operations Office
P.O. Box 5400
Albuquerque New Mexico 87115

JUN 29 1997

Sheriff John Bey
Converse County Sheriffs Office
107 North 5th
Suite 239
Douglas, WY 82633

Dear Sheriff Bey:

The Department of Energy (DOE) Uranium Mill Tailings Remedial Action Project requests notification of any unusual activities or events in or around its buried disposal cell in Converse County, Wyoming. In 1989, the DOE placed uranium mill tailings in the open pit of origin and covered the contaminated materials with the surrounding overburden materials with a thickness of approximately 40 feet. The site had been known locally as the Spook site and is on property formerly owned by Messrs. Hornbuckle and Hardy. The surrounding area is currently being ranched by these properties owners. The enclosed map provides general directions to the site.

If, during the course of routine activities, anomalies are observed or reported to you, the DOE requests notification as follows: please call the DOE Grand Junction Projects Office's 24-hour phone line at (303) 248-6070.

Should you have any questions, please contact Frank Bosiljevac at (505) 845-5638. Thank you for your assistance in this matter.

Sincerely,

Albert R. Chernoff
Project Manager
Uranium Mill Tailings Remedial Action
Project Office

Enclosure

cc w/o enclosure:
J. Virgona, GJPO
C. Jones, GJPO

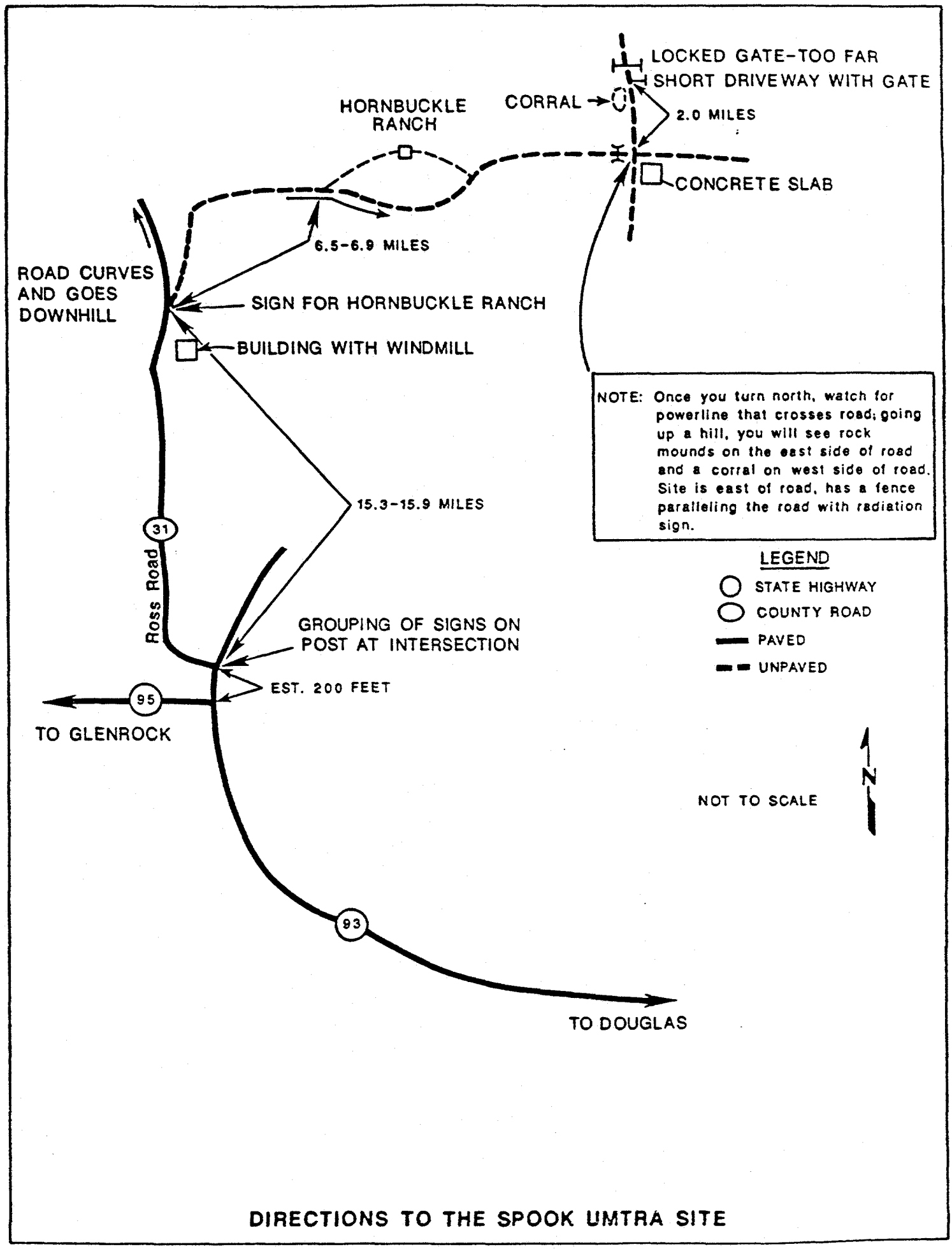

DIRECTIONS TO THE SPOOK UMTRA SITE

Department of Energy
Albuquerque Operations Office
P.O. Box 5400
Albuquerque New Mexico 87115

JUN 2 5 1992

Mr. Richard Griggs
National Weather Service Office
8410 Fuller Street
Natrona County Airport
Casper, WY 82604

Dear Mr. Griggs:

The Department of Energy (DOE) Uranium Mill Tailings Remedial Action Project is requesting receipt of notification in the event of issuance of flash flood or tornado warnings in Converse County, Wyoming. We would appreciate notification to the DOE Grand Junction Projects Office's 24-hour phone line at (303) 248-6070 within 8 hours of issuance of a warning or episode of warnings.

The purpose of this warning is to assist us in surveying and maintaining the integrity of the radioactive waste disposal site located 48 miles northeast of Casper, Wyoming.,

Should you have any questions, please contact Frank Bosiljevac of my staff at (505) 845-5638. Thank you for your attention in this matter.

Sincerely,

Steven Heap for

Albert R. Chernoff
Project Manager
Uranium Mill Tailings Remedial Action
Project Office

cc:
C. Jones, GJPO
J. Virgona, GJPO

ATTACHMENT 6

ACRONYMS

NOTICE

Page(s) size did not permit electronic reproduction. Information may be purchased by the general public from the National Technical Information Service, U.S. Department of Commerce, Springfield, VA 22161 (Area Code 703-487-4650). DOE and DOE contractors may purchase information by contacting DOE's Office of Scientific and Technical Information, P.O. Box 62, Oak Ridge, TN 37831, Attn: Information Services (Area Code 423-576-8401).